CORPORATION OF MADRAS.

MADRAS CITY WATER DISTRIBUTION SCHEME.

REPORT AND ESTIMATES.

J. W. MADELEY,
M.A., M. Inst. C.E., M. Am. Soc., C.E., Etc.,
Special Engineer,
Corporation of Madras.

SEPTEMBER, 1911

PRINTED BY
ADDISON & CO., LTD.
MADRAS.

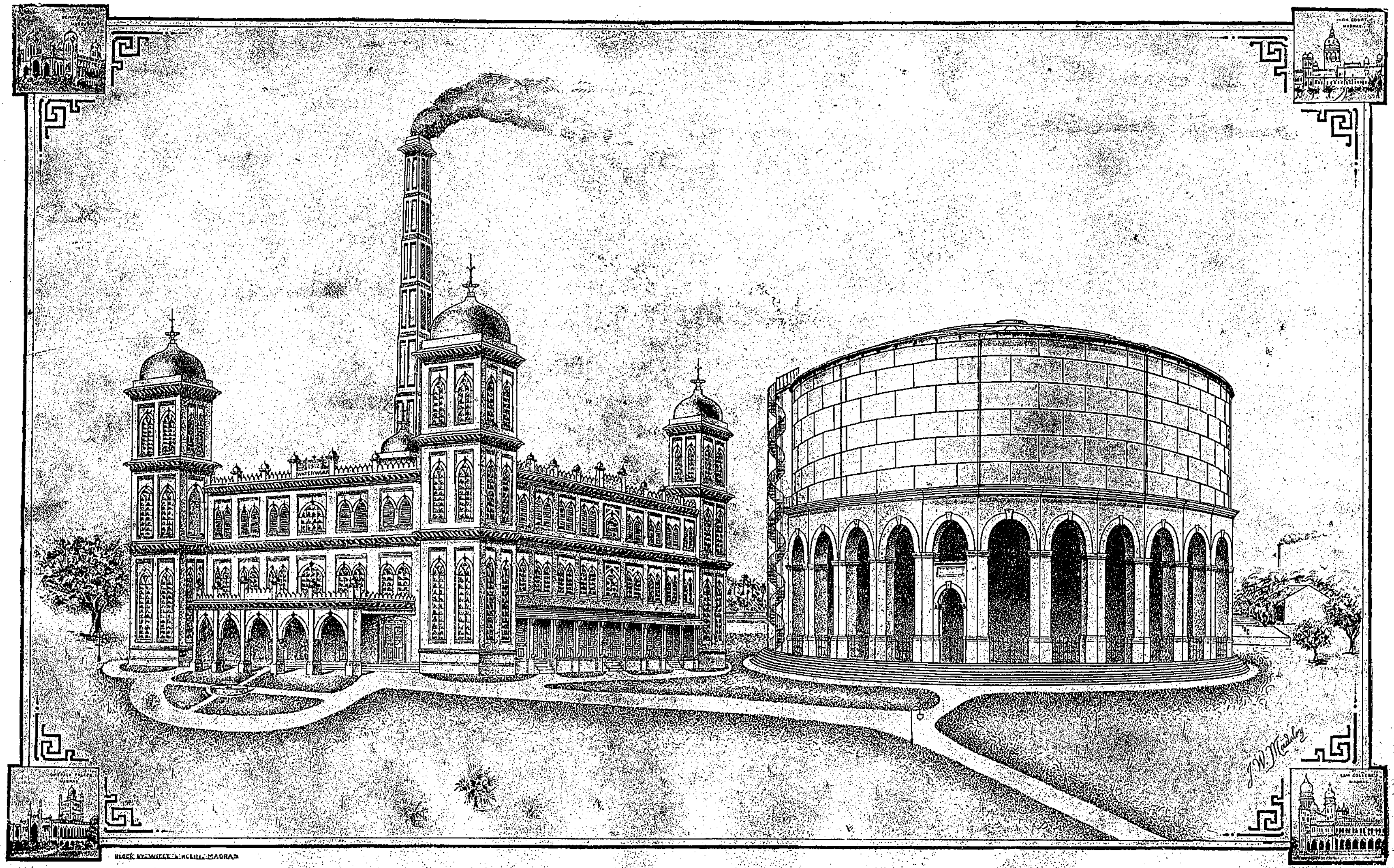

PROPOSED PUMPING STATION AND ELEVATED TANK AT KILPAUK.

CONTENTS.

PART I—REPORT.

INTRODUCTORY LETTER ... ... Page xiii

SECTION I.

PROCEEDINGS LEADING TO PREPARATION OF THIS REPORT AND GROUND COVERED BY REPORT.

1. Mr. Nowroji deputed to prepare a scheme for the improvement of Madras City Water-supply Distribution. 2. Government call upon the Special Engineer to submit remarks on Mr. Nowroji's scheme. 3. Government call upon the Special Engineer to prepare a scheme. 4. Enlarged scope of present Report. 5. Order of treatment of subjects dealt with in Report. 6. Order of carrying out work. 7. Immediate stopping of obvious waste. 8. Staff required. 9. Estimated cost of work. 10. Maintenance of Water-works. 11. Decentralisation and Specialisation.

Pages 1 to 10

SECTION II.

QUANTITY OF WATER AVAILABLE FOR SUPPLY OF MADRAS CITY FROM EXISTING SOURCES.

1. Reasons for this inquiry. 2. Quantity of water to be supplied to Madras. 3. Other questions arising from inquiry. 4. Description of Water-supply Works. 5. Quantity of water available. 6. Components of available yield. 7. Water diverted from Corteliar River by Tamarapakkam anicut. 8. Overflow at Tamarapakkam anicut. 9. Yield from catchment area below Tamarapakkam anicut. 10. Components of supply. 11. Water required for Madras City. 12. Water required for Irrigation. 13. Evaporation and Percolation. 14. Yield and supply curves. 15. Data for yield curves. 16. Data for supply curves. 17. Total yield. 18. Available yield. 19. Storage required to make best use of water. 20. Conclusions. 21. Further inquiries suggested by this investigation. 22. Existing statistics. 23. Cost of pumping at Red Hills. 24. Pumping required with scheme now in course of execution. 25. Effect of pumping on the health of the City. 26. Raising of F. T. L. of Red Hills Tank in order to diminish pumping. 27. Bund Section. 28. G.O.s relating to raising F. T. L. of Red Hills Tank. 29. Increased storage obtained by raising F. T. L. by 1½ feet. 30. Effect of also raising lowest irrigation level by 1½ feet. 31. Gain to irrigation in good seasons. 32. No loss sustained by irrigation in dry years. 33. Figures shewing gain in good seasons resulting from proposed alterations. 34. Illustration of gain during good years due to proposed alterations. 35. Example of effect of alterations in years when monsoon fails. 36. Increased consumption will increase revenue. 37. Importance attached by Government to Madras Water-supply. 38. Effect on revenue of increased Water-supply to Madras. 39. Importance of collecting data. 40. Summary of results of the investigation into available water-supply. 41. Existing Rules for the regulation of water in the Cholavaram and Red Hills Tanks.

Pages 11 to 36

SECTION III.

Pumping Plant and Pumping Station—(Drawings Nos. 1—18.)

Pumping Plant:—1. Conditions governing design. 2. Pumping Plant ordered in advance of completion of Distribution Report. 3. Initial cost and cost of Maintenance. 4. Reasons for greater power than was originally contemplated. 5. Capacity of Pumping Plant.

Engines:—6. Type of Engines. 7. Leading Dimensions. 8. Compensating Device.

Main Pumps:—9. Pumps. Action of Pump. 10. Plungers. 11. Pump Valves. 12. Suction Pipes. 13. Delivery Pipes. 14. Air Vessels. 15. Safety Attachment.

Boilers Economisers, etc.:—16. Boilers. 17. Testing. 18. Automatic Chain Grate Stokers. 19. Superheaters. 20. Economiser.

Meters, Duty and Testing:—21. Venturi Meter. 22. Water-level and Pump-pressure Recorder. 23. Relief Valve. 24. Guaranteed duty of Plant. 25. Testing by Pressure. 26. Engine Tests.

Pumping Station Buildings:—27. Importance of a pleasing appearance. 28. Two designs prepared. 29. Design No. 1. 30. Foundations. 31. Suction culvert. 32. Chimney. 33. Traveller. 34. Design No. 2 not recommended. 35. Chimney for Design No. 2.

Pages 37 to 50

SECTION IV.

Elevated Tank—(Drawings Nos. 21, 22 and 23.)

General:—1. Why an elevated tank is required. 2. Previous proposals. 3. Altered conditions render tank supported on sand unsuitable. 4. Elevated tank now proposed. 5. Evolution of present design.

Tank Supports:—6. Load on foundations. 7. Load on brickwork. 8. Load on concrete. 9. Load on piers of combined brickwork and concrete.

Steel Tank:—10. Thickness of plates. 11. Joints of tank plates. 12. Spherical-bottomed tank considered but not proposed. 13. Inlet and outlet and wash-out pipes. 14. Overflow pipe. 15. Expansion joints. 16. Method of executing work.

Detailed Description of Steel Tank and Steel Supports:—17. Tank plates. 18. Riveted joints. 19. Roof. 20. Ventilator in roof. 21. Stanchions and beams. 22. Inlet-outlet pipes. 23. Overflow pipes. 24. Wash-out pipes. 25. Expansion joints. 26. Tie rods. 27. Access stairway and entrance. 28. Roof water and down pipes.

Proposed Specification of Materials and Workmanship for Steel Tank and Steel Supports:—29. Workmanship. 30. Quality of material. 31. Plates. 32. Erection in shops. 33. Erection at site. 34. Rivets and rivet-holes. 35. Riveting. 36. Caulking. 37. Painting. 38. Testing. 39. Contractor responsible for water-tightness and safety.

Proposed Specification for Alternative Designs:—40. Conditions which alternative designs must fulfil. 41. Loads. 42. Unit stresses.

Summary of Quantities, Loads, etc.:—43. Weight of steel work. 44. Weight of masonry. 45. Weight of water. 46. Loads.

Pages 51 to 70

SECTION VIII.

MADRAS CITY MUNICIPAL ACT.

1. Madras City Municipal Act of 1904 requires revision. 2. Standard regulations required to ensure uniformity of practice in Madras Presidency. 3. Provision of supply of drinking water by Corporation. 4. Fire hydrants to be provided. 5. Supply of water for domestic purposes. 6. President may in certain cases require owners to obtain private water-supply. 7. Making and renewing connections with Municipal water-works. 8. President may take charge of private connections. 9. Power of President to alter position of connections. 10. Provisions as to storage cisterns and other fittings, etc., to be used for connections with water-works. 11. Supply of water for other than domestic purposes. 12. Obligation of owner or occupier to give notice of waste of water. 13. Penalty for destroying valves, etc. Obligation to give notice of waste, etc. 14. Power of Corporation Engineer to enter houses to inspect, etc. 15. Where several houses supplied by one pipe each to pay. 16. Penalty for allowing persons to use the Corporation water. 17. Penalty for taking the Corporation water without agreement. 18. Power to let meters, etc., for hire. 19. Power to ascertain quantity consumed by meter, and remove meters, etc. 20. Power to cut off water in certain cases. 21. Penalty for application of water contrary to agreement. 22. Penalty for extension or alteration of pipes. 23. Cutting off of supply to premises. 24. Fencing of supply channel. 25. Trespass on land where conduit runs or premises connected with supply. 26. Procedure if name and address of trespasser unknown. 27. Construction of water-works. 28. Vesting of water-works in Corporation. 29. Powers of Corporation in executing works without City. 30. Jurisdiction of Magistrate without City in respect of such works. 31. Power of President in respect of laying pipes. 32. Notice and compensation to owner of property affected. 33. Prohibition against damage to works. 34. Prohibition against opening or removal of lock, cock or pipe. 35. Power of Corporation to make bye-laws.

Pages 113 to 122

SECTION IX.

WATER-WORKS BYE-LAWS.

1. Operation of Bye-laws and Regulations. 2. Definitions. 3. Application for supply. 4. Private water-supply. 5. Connection to Corporation mains. 6. Alteration or removal of Consumers' pipes and fittings. 7. Repairs to pipes, fittings, etc. 8. Provisions relating to the prevention of waste, etc, of water. 9. Consumers' pipes and fittings. 10. Material of Consumers' pipes. 11. General specification. 12. Lead pipes. 13. Cast-iron pipes. 14. Accessibility of pipes, &c. 15. Wrought-iron and steel tubes. 16. Brass and copper tubes. 17. Consumers' fittings. 18. Taps and cocks. 19. Bath and lavatory fittings. 20. Ball Taps (Croydon Pattern). 21. Supply cisterns. 22. Flushing cisterns. 23. Use of automatic flushing apparatus, hoses, etc. 24. Hot-water apparatus. 25. Warning pipes. 26. Testing and stamping. 27. Method of laying Consumers' pipes. 28. Premises not to be supplied through more than one supply pipe. 79. Separate supply pipe to every dwelling-house. 30. Position of stop-cock. 31. Taps for drinking water. 32. Consumers' outside taps or stand-pipes. 33. Pumps drawing water direct from water-supply pipe. 34. Prohibited connections of Consumers' pipes. 35. Certain supplies to be passed through meter. 36. Agreement for meter supplies. 37. Charges for water supplied by meter. 38. Water required for building purposes, etc. 39. Cattle troughs. 40. List of authorised plumbers. 41. Penalties Schedule A: Application for a supply of water. Schedule B: Agreement for the supply of water by meter. Schedule C: Authorisation of plumbers.

Pages 123 to 138

SECTION V.

Pipe Distribution System, Principles of Design and General Description.

1. Requirements of an efficient Distribution System. 2. Faults of existing system. 3. Population to be supplied. 4. Population of Madras City as a whole. 5. Populations of Divisions. 6. Capacity of system may be increased by erecting subsidiary tanks. 7. Quantity of water per head. 8. Maximum rate of supply. 9. Pressure to be maintained. 10. Principles determining arrangement of pipes. 11. Minimum size of pipes. 12. House connections. 13. Common and luxurious service. 14. Authorised fittings and plumbing. 15. Lead Pipes for domestic supply. Action of Red Hills Water on lead. 16. Disadvantage of wrought-iron pipes for house connections. 17. Fire protection. 18. Provision for special cases. 19. Private hydrants. 20. Automatic Sprinkler Installations. 21. Drencher Installations. 22. Open tanks at ground-level. 23. Charges for private fire protection. 24. Waterworks staff should be members of the Fire Brigade.

Pages 71 to 84

SECTION VI.

Prevention of Waste and Leakage.

1. The proposed supply will be sufficient only if waste is prevented. 2. Madras distribution syetem contains many unsound pipes. 3. Waste may be reduced by intermittent water-supply. 4. Dangers of an intermittent water-supply.

Methods of discovering waste and stopping it :—5. Limiting the number of connections. 6. Metering every water service. 7. House-to-house inspection. 8, Taking up and replacing all pipes and fittings. 9. Waste-water meter system. 10. Example of use of waste-water meters. 11. Proposed arrangement of waste-water meters in Madras. 12. Bulk meters. 13. Self-closing waste-not taps. 14. Force of public opinion.

Pages 85 to 98

SECTION VII.

Details of Proposed Distribution System.

1. General arrangement. 2. Principal mains and sub-mains in proposed system. 3. Carrying capacity of mains and pressure of water provided. 4. Pipe-laying work that should be taken up first. 5. Leading mains to encircle divisions. 6. Rider mains. 7. Air valves. 8. Wash-outs. 9. Sluice valves. 10. Venturi meters. 11. Hatch-boxes. 12. Cast-iron pipe joints. 13. Hydrants. 14. Public fountains. Self-closing taps. 15. Fountains and sewer flushing. 16. Use of unfiltered water. 17. Demand for unfiltered water.

Pages 99 to 112

PART II—APPENDICES.

APPENDIX No. 1.

DATA REGARDING SIZES OF PIPES, POPULATION TO BE SERVED, DISCHARGES AND PRESSURES UNDER PROPOSED NEW DISTRIBUTION SYSTEM.

	PAGES
Main No. 1	... 140 and 141
Do. Nos. 2 and 3	... 142 „ 143
Do. „ 4 „ 5	... 144 „ 145
Do. „ 6 „ 7	... 146 „ 147
North Mint Street, Rayapuram and Tiruvattiyur High Road Branches ...	... 148 „ 149
Perambur, Vyasarpadi and Chintadripet Branches	... 150 „ 151
Marshall's Road, Ice House Road and North Mylapore Branches ...	... 152 „ 153
Kutcherry Road Branch	... 154 „ 155

APPENDIX No. 2.

YIELD AND SUPPLY OF WATER FROM EXISTING SOURCES.

Average present supply including evaporation, percolation, irrigation and consumption by Madras City	158
Estimated supply including evaporation, percolation, irrigation and consumption of Madras City at 25 gallons per head per day for a population of 660,000 ...	159
Estimated supply including evaporation, percolation, irrigation and consumption of Madras City at 75 gallons per head per day for a population of 660,000 ...	160
Estimated supply including evaporation, percolation and consumption of Madras City at 25 gallons per head per day for a population of 660,000 without irrigation ...	161
Estimated supply including evaporation, percolation and consumption of Madras City at 75 gallons per head per day for a population of 660,000 without irrigation ...	162
Yield of catchment area drainable to Red Hills Tank in millions of cubic feet, from 1890 to 1908	... 163 to 172

APPENDIX No. 3.

TABLES SHOWING WATER SURFACES, AREAS AND CUBICAL CONTENTS AT HALF FEET VERTICAL INTERVALS.

Red Hills Tank	... 174 and 175
Cholavarm Tank	... 176 „ 177

APPENDIX No. 4.

DATA AND FIGURES TO SHOW EFFECT OF PROPOSED RAISING OF BOTH F. T. L. AND LOWEST LEVEL OF IRRIGATION DURING THE FAILURE OF MONSOON.

Years 1899—1901	... 180 to 183
„ 1904—1906	... 184 „ 187

PART III—ESTIMATES.

A. DETAILS, WEIGHTS, DIMENSIONS AND UNIT COSTS OF CAST-IRON PIPES AND SPECIALS, Etc., ADOPTED IN ESTIMATES.

PAGES

Dimensions of Cast-iron Pipe Flanges 190

Weights and Dimensions of—

Socket and Spigot Cast-iron pipes 191
Do. do. quarter Bends 192
Do. do. one-eighth Bends 193
Do. do. one-sixteenth Bends 194
Do. do. Tee Branches ... ... 195 to 200
Do. do. reducing special Tee Branches 201
Do. do. Taper Pipes ... ... 202 to 205
Flanged Cast-iron Taper Pipes for connecting Sluice Valves with Mains ... 206
Cast-iron Collars 207

Particulars and Unit Cost of—

Cast-iron Saddles ... ... 208 and 209
Sluice Valves 210

Cost per Foot run—

Excavation for Pipe-laying 211
Laying and jointing Cast-iron Pipes 212
Summary for Pipes and Pipe-laying 213
Cutting Mains and fixing Saddles 214

B. DETAILED ESTIMATES OF COST OF HEAD WORKS OF THE WATER DISTRIBUTION SYSTEM FOR THE CITY OF MADRAS.

Pumping Station, Design No. 1 ... ... 216 to 220
Square Chimney for Pumping Station, Design No. 1 ... ... 221 and 222
Pumping Station, Design No. 2 ... ... 223 to 226
Circular Chimney for Pumping Station, Design No. 2 ... ... 227 and 228
Elevated Tank... ... ... 229 to 231
Connections of the new 48-inch Pumping Main to existing and proposed new Distribution Mains ... ... 232 ,, 234

C. DETAILED ESTIMATES OF COST OF PIPE DISTRIBUTION SYSTEM FOR THE CITY OF MADRAS.

Straight Socket and Spigot Cast-iron Pipes ... ... 238 and 239
Socket and Spigot Cast-iron Bends 241
Socket and Spigot Cast-iron Tee Branches for Mains ... ... 243 to 245
Socket and Spigot Cast-iron Tee Branches for Air Valves 245

List of Estimates—(*continued.*)

PAGES

Socket and Spigot Cast-iron Tee Branches for connecting new Pipes to existing Hydrants 246
Socket and Spigot Cast-iron Tee Branches for connecting new Pipes to existing Fountains 246
Socket and Spigot Cast-iron Taper Pipes where Mains are reduced in size ... 247
Socket and Spigot Cast-iron Taper Pipes for reducing Mains to Waste Detecting Meter Connections 248
Cast-iron Flanged Taper Pipes for reducing Mains to Sluice Valve Connections ... 249
Cast-iron Saddles for connecting existing Mains to new system 250
Cast-iron Collars for Mains, connection to Waste Detecting Meters, existing Hydrants and Fountains 251
Sluice Valves for Mains, for connection to new Hydrants and Wash-outs 252
Waste-water Detecting Meters 253
Double Air Valves with Screw-down Valves combined 253
Venturi Meters with combined Diagram and Counter Recorders 254
Hatch Boxes and Scour Pipe Connections to Venturi Meters 254
Surface Boxes for Sluice Valve Chambers 255
Wrought-iron Pipes and Fittings for connecting to existing house services ... 256
Excavation for laying Cast-iron Pipes 257
Laying Cast-iron Pipes 258
Jointing Cast-iron Pipes, Socket and Spigot Straight Pipes 259
Jointing Socket and Spigot Cast-iron Specials, Bends 260
Jointing Socket and Spigot Cast-iron Branches ... ... 261 and 262
Jointing Cast-iron Tapers 263
Jointing Cast-iron Collars 264
Cutting Mains and fixing Cast-iron Saddles for connecting existing Mains to new system. 265
Laying and jointing Wrought-iron Galvanized Pipes for connecting to existing house services 266
Tapping Mains and fixing Ferrules and Bends for connecting to existing house services. 266
Cleaning and coating old Pipes to be re-laid in the new system 267
Excavation for old Cast-iron Pipes to be re-laid in new system... 267
Laying old Cast-iron Pipes to be used in new system 268
Jointing old Cast-iron Pipes to be re-laid in scheme 268
Disjointing old Pipes and removing 269
Summary of Cost of Pipes and Pipe-laying ... ... 270 and 271
Constructing Cast-iron Pillar Fountain including supplying and fixing of Pipes, Fittings etc. 272
Constructing Double Tap Masonry Pillar Fountain ... ... 273 and 274
Constructing Single Tap Masonry Pillar Fountains ... ... 275 „ 276
Constructing a Double Tap Masonry Pillar Fountain at head of shallow sewers ... 277 „ 278
Constructing a washing place connected with a flushing Latrine 279
Summary of Cost of Street Fountains 280
Constructing Chamber for $2\frac{1}{2}$-inch Sluice Valve 281
Do. do. 3 do. do. 281
Do. do. 4 do. do. 282
Do. do. 5 do. do. 282
Do. do. 6 do. do. 283
Do. do. 7 do. do. 283
Do. do. 8 do. do. 284
Do. do. 9 do. do. 284
Do. do. 10 do. do. 285
Do. do. 12 do. do. 285
Do. do. 18 do. do. 286
Do. do. 24 do. do. 286
Summary of Cost of Sluice Valve Chambers 287

List of Estimates—(*continued.*)

		PAGES
Constructing Chamber for 8-inch Waste-water Detecting Meter	...	... 288
Do. do. 6 do. do. do.	...	... 288
Do. do. 4 do. do. do.	...	... 288
Summary of Cost of Waste-water Detecting Meter Chambers	...	... 289
Constructing Chamber for 3-inch Air Valve	...	... 290
Do. do. 4 do. do.	...	... 290
Do. do. 6 do. do.	...	... 291
Summary of Cost of Air Valve Chambers	...	... 291
Venturi Meter Chamber and Recorder House on a 42-inch Main	...	... 292
Do. do. do. do. 36 do.	...	... 293
Do. do. do. do. 30 or 27-inch Main	...	... 294
Do. do. do. do. 22 or 18 do.	...	... 295
Summary of Cost of Venturi Meter Chambers	...	... 296
Sluice Valve Hydrant with Stand-post...	...	... 297
Wash-out into Side Drain	...	... 298
Special lengths on New Mains Nos. 1 and 7	...	... 299
Summary of Cost of Miscellaneous Work	...	... 300
General Abstract of Water Distribution Scheme	...	... 301

LIST OF PLATES BOUND WITH REPORT.

1.	Elevated Tank and Pumping Station—Prospective View	Frontispiece.
2.	Plan showing Catchment Areas which discharge into Red Hills System.	At end of Book.
3.	Plan showing Proposed and Existing Works for the Water-supply of Madras	Do.
4.	Diagram showing important levels in New Water-works	Do.
5.	Diagram of available Yield and Supply required under various assumptions	Do.
6.	Periods of pumping and levels of water in Red Hills Lake	Do.
7.	Curves showing connection between Pumping and Cholera Death-rate ...	Do.
8.	Curves of Contents and Numbers of Days storage provided by Red Hills Tank	Facing Page 27.
9.	Diagram showing benefits obtained in normal years by raising both F. T. L. and lowest level of irrigation by 18 inches as proposed ...	Do. 30.
10.	Diagram to show effect of proposed raising of both F. T. L. and lowest level of irrigation by 18 inches during 1900 to 1901 and 1904 to 1906 when monsoon failed	At end of Book.
11.	Curves showing growth of population in Madras from 1871 to 1911 ...	Do.
12.	Curves showing past and probable future growth of population of eight divisions	Do.
13.	Curves showing past and probable future growth of Madras taken as a whole	Do.
14.	Water Meter Diagrams	Facing Page 91.
15.	Plan of leading Mains and Areas supplied by them	At end of Book.

LIST OF DRAWINGS BOUND IN BOOK IN CASE No. 1.

1. Pumping Station and Elevated Tank, Perspective View.
2. Plan showing position of Pure Water Tanks, Pumping Station, Elevated Tank, Wash-outs, etc.
3. Kilpauk Pumping Station—Design No. 1, Plan and Elevations.
4. Do. do. do. Details of Foundations of Engines, Pumps, Boilers and Suction Culvert.
5. Kilpauk Pumping Station—Design No. 1, Foundations of Walls and Towers, and arrangement of reinforced concrete floor beams.
6. Do. do. do. Elevation partly in section of front side.
7. Do. do. do. do. do. east side.
8. Do. do. do. Details of Domes and eaves Corbels.
9. Do. do. do. Details of Girders supporting Roof.
10. Do. do. do. Method of supporting Travelling Crane and detail of Porch Arches.
11. Do. do. do. Details of Venetian Side Doors and Name Tablet.
12. Do. do. do. do. Central Windows of front face and section of flue.
13. Do. do. do do. Central Windows of north face and steel chimney.
14. Do. do. do. do. Glazed Windows and Corbel Brackets to Verandah.
15. Do. do. do. do. Glazed Windows in towers.
16. Do. do. do. do. Louvre Windows, Parapets and front Venetian Door.
17. Do. do. do. General Arrangement of Engines and Boilers.
18. Do. do. Design No. 2, Plan and Elevations.
19. Relief Valve connections to Suction Culvert.
20. 48-inch Venturi Meter Tube (throat ratio 1 : 6), with combined Diagram and Counter Recorder.
21. Elevated Tank, Elevation, Sections and Plans.
22. Do. do. Details of Steel Tank.
23. Do. do. Enlargement of Main Piers and Arches.
24. Plan showing divisions of Madras to be supplied by different Mains.
25. Hydraulic Contour Map of the town of Madras.
26. Plan and Section of 48-inch Steel Main.
27. Enlarged Plan showing connection of 48-inch Steel Main to existing and proposed distributing Mains.
28. Details of Castings for connections do. do. do.
29. Do. do. do. do. do. do.
30. 48-inch Steel Main from Elevated Tank. Longitudinal Section showing hydraulic gradients, etc.
31. Main No. 1 supplying portions of Purasawakum, Georgetown and Tondiarpet Divisions.
32. Do. „ 2 do. Perambur and portions of Purasawakum and Tondiarpet Divisions.
33. Do. „ 3 do. portions of Purasawalkum, Vepery and West Georgetown Divisions.
34. Do. „ 4 do. Chintadripet and portions of Egmore and Triplicane Divisions.
35. Do. „ 5 do. portions of Vepery and East Georgetown Divisions.
36. Do. „ 6 do. portions of Mylapore Division.
37. Do. „ 7 do. Mylapore Division and portions of Egmore and Nungambakum Divisions.
38. Branches from Main No. 1, North Mint Street Branch, Rayapuram Branch and Tiruvattiyur High Road Branch.

List of Drawings Bound in Book in Case No. 1—(*continued.*)

39. Branches from Main No. 2, Perambur Branch and Vyasarpadi Branch.
40. Do. do. „ 4, Chintadripet Branch and Marshall's Road Branch.
41. Do. do. „ 7, Ice House Road Branch, North Mylapore Branch and Kutcherry Road Branch.
42. Plan of a Single Tap Fountain.
43. Do. Double do.
44. Do. do. do. at Head of Shallow Sewers.
45. Do. Pillar Fountain.
46. Plan of Washing Place connected with a Flushing Latrine.
47. Do. Valve Chambers, Sluice Valves and Surface Boxes, Valves ranging from $2\frac{1}{2}$ to 7-inch diameter.
48. Plan of Valve Chambers, Sluice Valves and Surface Boxes, Valves ranging from 7 to 12-inch diameter.
49. Plan of Valve Chambers, Sluice Valves and Surface Boxes, Valves ranging from 12-inch Sluice Valve on 14, 16, 18 and 20-inch Mains.
50. Plan of Valve Chambers, Sluice Valves and Surface Boxes, Valves ranging from 18-inch Sluice Valve on 24, 27, 30 and 33-inch Mains.
51. Plan of Valve Chambers, Sluice Valves and Surface Boxes, Valves ranging from 24-inch Sluice Valve on 36 and 42-inch Mains.
52. Waste Detecting Meter Chambers 4 to 8-inch diameter.
53. Do. do. 10-inch and above in diameter.
54. 3 and 4-inch Air Valve Chambers.
55. 6-inch Air Valve Chamber.
56. Brown's Patent Surface Boxes with self-locking lids for Sluice Valve Chambers.
57. Cast-iron closed Covers with frames for Waste Detecting Meter Chambers and Air Valve Chambers.
58. Sluice Valve Hydrant with street stand-posts.
59. Fire Engine Suction Tank for Public Buildings.
60. Plan of a Wash-out into Side Drain.
61. Do. Venturi Meter Chamber and Recorder House for Distributing Mains.

DRAWINGS MOUNTED ON ROLLERS IN CASE No. 2.

62. Plan showing Existing Mains and Proposed New Mains.
63. Do. Proposed arrangement of Waste-water Prevention Meters.
64. Do. Positions of Existing Street Fountains, Hydrants, etc., in the City of Madras.

CORPORATION OF MADRAS,
SPECIAL WORKS DEPARTMENT,
MADRAS, 30*th September*, 1911.

To

THE PRESIDENT,
Corporation of Madras.

SIR,

I have the honour to submit herewith a report—accompanied by plans and estimates—containing my proposals for the improvement of the Water-supply Distribution System of the City of Madras.

The report also contains proposals for increasing the quantity of water available for the supply of Madras, and the two concluding paragraphs deal respectively with the Waterworks Clauses of the Municipal Act, and with proposed Waterworks Bye-laws of which a complete code is submitted.

I desire particularly to draw your attention to paragraphs 6 and 7 of the Introduction (pages 4 and 5). In these paragraphs are mentioned the works that are most urgently required. I suggest that, in view of the importance of carrying them out as early as possible, Government be requested to pass orders on these works without waiting to complete the consideration of the remainder of the report.

I have endeavoured to write this report in such a manner that it may readily be understood by all those who are interested in the improvement of the city's water-supply.

Should you desire it, I shall be very pleased personally to explain my proposals to the Corporation, and to answer any questions which Commissioners may wish to put, just as I did in the case of my Tondiarpet Drainage Report.

I have the honour to be,
Sir,
Your most obedient servant,

J. W. MADELEY, M.A., M. INST. C.E.,
Special Engineer, Corporation of Madras.

SECTION I.

INTRODUCTION.

Proceedings leading to Preparation of this Report and Ground covered by Report.

1. Mr. Nowroji deputed to prepare a scheme for the improvement of Madras City Water-supply Distribution. 2. Government call upon the Special Engineer to submit remarks on Mr. Nowroji's scheme. 3. Government call upon the Special Engineer to prepare a scheme. 4. Enlarged scope of present Report. 5. Order of treatment of subjects dealt with in Report. 6. Order of carrying out work. 7. Immediate stopping of obvious waste. 8. Staff required. 9. Estimated cost of work. 10. Maintenance of Waterworks. 11. Decentralisation and Specialisation.

Mr. Nowroji deputed to prepare a scheme for the improvement of Madras City Water-supply Distribution.

1. In G. O. No. 1487 M., dated 16th August, 1906, sanction was accorded to the proposals of the Sanitary Engineer to Government, that Mr. Nowroji should be deputed to prepare a scheme for the improvement of the water-supply distributory system in the City of Madras.

Mr. Nowroji's duties were limited to the investigation of the following two points :—

(*a*) The substitution of larger pipes where calculations showed that they were necessary.

(*b*) Extensions of pipe lines.

On 1st February, 1908, Mr. Nowroji was appointed Assistant to the writer in the Waterworks Construction Branch of the Special Works Department, and on 15th October, 1908, the Special Engineer received from him for submission to the President of the Madras Corporation his "Report on a Scheme for the Improvement of the Water-supply Distribution System in the City of Madras," dated June, 1908. This report, together with the plans and estimates which accompanied it, was forwarded to the President on the following day.

Government call upon the Special Engineer to submit remarks on Mr. Nowroji's scheme.

2. In Memorandum No. 4321-1 M., dated 6th January, 1909, the Under-Secretary to Government, Local and Municipal Department, wrote :—

The Government desire to have the detailed remarks of the Special Engineer of the Corporation on the scheme before the plans and estimates for the improvement of the water-supply distribution system, prepared by Mr. Nowroji, are subjected to scrutiny in the Public Works Department. The President is requested to obtain these remarks and to submit them to Government.

In accordance with this Memorandum, the Special Engineer submitted his remarks in a printed note, dated 20th February, 1909, and addressed to the President of the Corporation of Madras.

Government call upon the Special Engineer to prepare a scheme.

3. In G. O. No. 898 M. Mis., dated 5th June, 1909, it was stated that *the plans and estimates for the improvement of the Distributory System of Water-supply in the City of Madras will be returned to the President with the request that he will arrange to have them revised by the Special Engineer of the Corporation as he considers best in the circumstances. The Special Engineer should be informed that the scheme to be placed before the Corporation and the Government should be that prepared by him and that he should take the full responsibility in the matter.*

In accordance with this order, the Special Engineer has prepared the report now presented.

Use has been made of Mr. Nowroji's plans and estimates wherever they apply, but it has been necessary to work out the whole scheme over again, because the writer has started with premises different from those adopted by Mr. Nowroji.

Enlarged scope of present Report.

4. It has been impossible to restrict the report to the limits laid down for Mr. Nowroji. Other questions have arisen and have had to be considered. The principal of these are—

(1) **The quantity of water available for the supply of Madras City.** This question is dealt with in Section II of the Report. The reasons for the enquiry are given at the beginning of that section.

(2) **The Pumping plant** to be provided to pump, after filtration, the water brought down by the new conduit. Also the buildings required for this machinery.

(3) **The Elevated Tank** required to maintain a steady pressure on the Mains.

(4) **The detection and prevention of leakage** and waste in the distribution system. It is essential, in view of the numerous leaks in the existing pipes and the great waste which now takes place continuously, that means should be provided, when introducing the new system, to detect and stop leakage and waste.

(5) **Waterworks Bye-laws.** The Special Engineer received instructions from the late President to prepare a set of Waterworks Bye-laws and to incorporate them with this report. This has also entailed proposals for the amendment and addition to those clauses of the Corporation Act which deal with water-supply.

Items 2 and 3 were both included in the general scheme submitted by Mr. Nowroji. But at that time designs could not be prepared because it was necessary first to work out the details of the Distribution Scheme in order to ascertain what pressure would be required and how much water the pumps should be capable of delivering. Until this had been done, it was not possible to

determine the following requirements :—(1) the most suitable type of pump, (2) the power and number of engines, (3) the form and dimensions of the pumping station, and (4) the form and height of elevated tank.

If reference be made to G. O. No. 304 W., dated 11th March, 1907, dealing with the new waterworks for Madras, it will be found that the late Chief Engineer to Government recommended that Messrs. Rendel and Robertson should deal with the orders for both the Pumps and the Elevated Tank. The Corporation, who have appointed Messrs. James Mansergh & Sons as agents instead of Messrs. Rendel and Robertson, prefer that the Special Engineer should himself do as much of this work as possible, and the contract for the pumping plant was prepared in Madras without any reference to the agents in London. In the case of the elevated tank however, the Special Engineer, with the sanction of the Standing Committee, took advantage of being in England on leave in 1910 to consult the agents with regard to the detailed design of the elevated tank, for which he had himself previously prepared general drawings and a detailed specification.

In consultation with the agents and in their office were worked out the details of the tank described in Section IV.

Order of treatment of subjects dealt with in Report.

5. The order of treatment in this report has followed the natural sequence. Beginning with an introduction (Section I) explaining how it came to be written and what is its scope, the report proceeds, in Section II, to deal with the quantity of water available for Madras City, a subject not usually considered in a Distribution Report but which had to be examined because no previous investigation had been made. In this Section it is recommended that certain measures should be taken to increase the quantity of water available for the Madras City Water-supply. The effect of these measures on the irrigation supply is dealt with in some detail. The report then goes on to the distribution of water after it leaves the filter beds and is collected in the pure water tanks.

The water has first to be pumped, and then distributed under adequate pressure to the inhabitants of Madras. Section III is devoted to the Pumping Plant designed to impart the requisite pressure to the water and to the station for housing the machinery. Section IV describes the proposed Elevated Tank, the object of which is to act as a balancing tank and to insure an adequate pressure all over the town. In Section V is given an explanation of the principles of the design of the pipe distributory system and its adjuncts. Section VI is confined to the very important subject of the prevention of waste and leakage. Section VII treats of details of the Distributory System. Section VIII deals with the Waterworks Clauses of the Madras City Municipal Act of 1904 and proposes such additions and alterations as appear desirable to enable the Corporation to provide a sufficient supply of pure water, and to maintain adequate control over it. In the final Section (IX) is given a proposed code of waterworks bye-laws, the object of which is mainly to prevent waste, mis-use and contamination of the water-supply. Following the report proper are a series of

appendices and detailed estimates of the cost of the works proposed. In brief, the report is divided as follows :—

PART I.—REPORT.

SECTION I.—Introduction. Proceedings leading to Preparation of Report and Ground covered by Report.
SECTION II.—Water available for Madras City.
SECTION III.—Pumping Station and Plant.
SECTION IV.—Elevated Tank.
SECTION V.—Pipe Distribution System, principles of Design and General Description.
SECTION VI.—Prevention of Waste and Leakage.
SECTION VII.—Distribution System, details of design.
SECTION VIII.—Madras City Municipal Act.
SECTION IX.—Waterworks Bye-laws.

PART II.—APPENDICES.

PART III.—ESTIMATES.

A more detailed list of contents is given on pages i—viii.

The Report is illustrated by 15 Plates and is accompanied by 64 Drawings from which the scheme can be studied in detail. Sixty-one of the drawings are bound in a book, and three large plans of Madras are mounted on rollers. Lists of the plates and drawings are given on pages viii—x.

Order of carrying out work.

6. It is of great importance that the following works should be carried out with the least possible delay :—

(1) The construction of the Pumping Station and erection of Pumping Engines described in Section III.

(2) The erection of the Elevated Tank described in Section IV.

(3) The laying of the two large new Mains Nos. 1 and 7 to the North and South of the city respectively (see Section VII).

The new conduit from Red Hills Lake should be finished by the end of 1912, and the filters, now in course of construction at Kilpauk, should be completed some six months later, but the new filtered water-supply will not be available for use until the pumps are working. With Government sanction a contract has already been let for the pumping machinery, which will probably be delivered in the course of the next six months, and it is very important that the buildings should be put in hand at once, for the machinery cannot be erected conveniently until the building is ready to receive it.

The Elevated Tank is required for the satisfactory working of the pumps, and its construction should be started at the same time as the Pumping Station.

Mains Nos. 1 and 7 are urgently required to supply Tondiarpet, Royapuram and Mylapore, districts in which the water-supply is very defective.

The writer suggests that Government be requested to pass orders on these three works as early as possible, leaving for further orders those subjects which may require more prolonged consideration, as for instance measures for rendering more water available for Madras City (Section II), proposed alterations to the Madras City Municipal Act (Section VIII) and proposed Waterworks Bye-laws (Section IX).

7. The writer would draw special attention to the importance of immediately taking steps to stop the large amount of obvious and visible waste and mis-use of water that is now constantly taking place throughout the city. Every one who goes much about Madras must often hear loud complaints of the lack of water. He must frequently see a tap turned wide open but yielding nothing, while twenty or more women patiently wait for the coming of water. Not half a mile away, he may very likely see water flowing freely from a tap, while a man is leisurely cleaning his teeth or washing his feet in the brief intervals of friendly gossip with some chance acquaintance—the tap running all the time. Again no great distance away he may, if observant, see a tap running full bore to water a garden. Those in Madras who daily wash their teeth and limbs, in a wasteful manner, and those who use pipe water to irrigate their gardens, are depriving thousands of the water requisite for health and cleanliness. Waste and mis-use of water in this way is inexcusable, but how reprehensible it is, does not appear to be generally recognised, and the writer recommends that preventive measures should be taken without delay. Four such measures are :— **Immediate stopping of obvious waste.**

(1) To fit to every public fountain waste-not taps of the limited discharge type described in Section VI, paragraph 13.

(2) To close as many garden taps as possible. To keep a register of such as are allowed, to inspect them regularly, and if the taps are used for other than domestic purposes, as defined by Section 193 of the Municipal Act, then to take action under Section 196 of the Act. The argument in such a case would be that if water supplied for domestic purposes under Section 193 be used for non-domestic purposes, then it is mis-used within the meaning of Section 196.

(3) To print and distribute widely pamphlets in English, Tamil, Telugu and Hindustani pointing out the evils which result from waste and mis-use of water.

(4) To obtain the co-operation of the police in stopping mis-use and waste. A few convictions and punishments on this account would exercise a strongly deterrent influence on those persons, who, through carelessness or thoughtlessness, are responsible for a great deal of waste.

If these four measures are adopted at once, then immediate relief will be felt by many—though by no means all—of those who at present suffer from scarcity of water. These measures should also have a most beneficial influence in educating popular opinion, and in teaching the citizens of Madras that water is valuable, and that he who wilfully wastes it is an offender against the welfare of the community.

8. The erection of the Pumping Station and Elevated Tank and the laying of the 48-inch steel main and auxiliary works may be left to the joint supervision of Mr. Nowroji, who is now in charge of the construction of the conduit and filter beds, and of Mr. Newland, the Municipal Mechanical **Staff required**

Engineer who is in charge of the Sewage Pumping Stations belonging to the Corporation.

Under this arrangement, Mr. Nowroji would look after the construction of the buildings and other masonry work, and Mr. Newland would maintain a general supervision over the erection of the engines and other mechanical works. Their spheres would overlap to a certain extent, for instance in the engine foundations and the supports of the elevated tank. In such cases they would work in consultation.

For the detailed supervision of masonry work there is already sufficient provision in the sanctioned establishment for Waterworks construction. For the erection of the pumping engines and other mechanical work, it is strongly recommended that the services should be retained of the Supervisor who has recently had charge of the erection of similar engines at the Law College and Royapuram Sewage Pumping Stations.

For the pipe-laying the following staff should be sanctioned immediately :—

No.	Designation.	Rate of Pay.
1	Assistant Engineer	Rs. 400 (+ Rs. 30 for Motor Cycle).
2	Supervisors	,, 100—200 (including all allowances).
4	Overseers	,, 80—90
4	Do.	,, 50—70
8	Surveyors	,, 50
1	Draftsman	,, 70
1	Do.	,, 50
2	Time-keepers or Clerks	,, 40
2	Do. do.	,, 30
3	Peons...	,, 8
20	Lascars	,, 7
	Contingencies	,, 150

The Assistant Engineer is required because Mr. Nowroji's hands will be full with his other work for the next eighteen months or two years.

The Assistant Engineer, one Draftsman and one Surveyor should be engaged as soon as possible, so that they may prepare detailed plans of special lengths and of the pipes required. The remaining establishment should be engaged as required, and some of them may be drafted from the present establishment engaged on the conduit as that work approaches completion.

Estimated cost of Works.

9. The total estimated cost of the works recommended in this report is Rs. 42,08,960. This sum includes the estimated cost of works for which lump

sums amounting to Rs. 5,31,832 were sanctioned in G. O. No. 304 W., dated 11th March, 1907. The following table is a brief abstract of the estimates :—

Item No.	Description of Work.	Amount of present estimate.	Lump sums sanctioned in G. O. No. 304 W., dated 11th March, 1907.	Further amounts requiring sanction.
		RS.	RS.	RS.
1	Engine and Boiler-house and Engine Foundations, Pump Wells and Chimney ...	1,82,850	38,502	1,44,348
2	Engines, Pumps and Boilers	3,90,000	4,00,000	— 10,000
3	Elevated Iron Tank ...	3,20,300	43,730	2,26,970
4	Low Level Storage Channel covered		49,600	
5	Connections to existing and new system at Kilpauk Shaft	20,700	...	20,700
6	Pipes and Specials, Valves, Meters laid complete, including labour and materials...	30,30,000	...	30,30,000
7	Masonry work connected with Distribution Scheme	2,65,110	...	2,65,110
	Total ...	42,08,960	5,31,832	36,77,128

As has already been explained in paragraph 4 only lump sums could in 1907 be provided for the pumping machinery, the pumping station and the elevated tank, because the sizes and numbers of the pumping engines, and the height of the elevated tank could not be determined until the distribution scheme had been worked out.

It is now proposed to instal more powerful pumping engines and to construct a higher elevated tank than was originally contemplated. These alterations, together with the great increase that has taken place in the cost of labour and materials since 1906, account for the difference between the estimates and the approximate lump sums sanctioned in the G. O. above referred to.

Maintenance of Water-works.

10. It will not be out of place to add a few words about the maintenance of the waterworks, which, if completed as now designed, should provide Madras with a supply of water ample in quantity and unexceptional in quality. But if this desirable condition is to be attained and, what is more important, if it is to be maintained, then it is essential that proper supervision should be exercised.

Consider briefly how much expert supervision is required. At Red Hills Lake, the water should be drawn off from the purest stratum only, neither from the top where there are floating impurities, nor yet from the bottom where sediment accumulates, but from a point a little way below the surface.

The roughing filter must be worked so as to give the best results obtainable. The flow of water must be even and steady and the bed should be cleaned at regular intervals. The conduit will require periodical inspection to insure that there is no pollution, and that no water is improperly abstracted.

Above all it is absolutely necessary to work the filters carefully and in a systematic manner, so that the rate of flow may be steady and that the indis-

pensable gelatinous surface layer may not be disturbed. The individual filter beds must be cleaned in regular rotation and the sand layer must be periodically replaced by properly washed clean sand. A complete and continuous record must be maintained of the work done by each filter and the analyses of the filtered water must be regularly made from samples taken in a proper manner. Finally, the pipe distribution system itself requires constant vigilance to prevent both contamination, and the waste or mis-use of water, and also to ensure that the bye-laws shall be strictly complied with. Every morning water consumption diagrams should be scrutinised, and at the first sign of abnormal consumption or waste in any district, steps should immediately be taken to stop the loss before it becomes excessive. For some time to come a great deal of continuously steady and patient work will be necessary to detect and rectify defective mains, leaky service pipes, and improper fittings. In the new waterworks, both those in course of construction and those proposed, means are provided for systematically measuring and controlling the water at every stage of its flow from the time it leaves Red Hills Lake until the moment it is delivered to the consumer. But in order that the best results may be obtained, that the water may be properly purified and that there may be no waste, no mis-use, and no contamination, it is necessary that the whole system should be under the supervision of an expert Engineer.

Decentralisation and Specialisation.

11. The last paragraph leads up to a point which the writer first formally brought forward in his printed Note, dated 2nd May, 1910, the necessity of decentralisation as a general policy for the Engineering Departments of the Corporation. In the early stages of a city's development, when the water-supply is derived chiefly from wells supplemented by a few fountains scattered over the town, when the drainage is effected by means of open channels, and when other public services are in a like backward state; in a city at such a stage of development the amount of work requiring expert engineering knowledge is slight and one Engineer is sufficient.

Madras has, however, outgrown that stage, and the Corporation is taking measures to bring the city into line with the most advanced communities in respect of water-supply, drainage, roads and lighting, and the time has now arrived when the supervision of these works should be considered more especially in connection with the elaborate water and drainage works which the Corporation is carrying out. In future the different works of the Corporation should be placed under separate men. For instance, one Engineer should be in charge of the sewerage of the city, another of the water-supply, and a third of the roads, bridges and buildings. The staff would not necessarily be larger than the present staff, but instead of one man attending to all engineering works in one section of Madras, he would be in charge of one class of work throughout the whole city, and would soon become a specialist in that particular work. Sufficient powers should be delegated to each Engineer to enable him to deal with the bulk of the business of his department, in order that the Chief Engineer may be saved a great deal of formal work and routine signature that at present occupies so much time that might more profitably be spent on work.

This sub-division of work is universal in England. Bombay and Calcutta have adopted it. Now Madras is about to amend its Municipal Act on the Bombay model, it would be well to consider arranging its engineering work in the same way as is done in that city.

Decentralisation and specialisation are mentioned here because a considerable amount of new drainage and waterworks will be completed within the next few years, so that, should the Corporation decide to adopt these principles to govern their policy, then it would be well that the principles should be put into practice at an early date before the new work is handed over to the maintenance staff.

This question is of especial interest to the writer who is naturally anxious that the works designed and executed by him should be looked after by an officer who will himself be able to devote to them sufficient time to ensure that they shall be worked as efficiently and economically as possible.

SECTION II.

QUANTITY OF WATER AVAILABLE FOR SUPPLY OF MADRAS CITY FROM EXISTING SOURCES.

1. Reasons for this inquiry. 2. Quantity of water to be supplied to Madras. 3. Other questions arising from inquiry. 4. Description of Water-supply Works. 5. Quantity of water available. 6. Components of available yield. 7. Water diverted from Corteliar River by Tamarapakkam anicut. 8. Overflow at Tamarapakkam anicut. 9. Yield from catchment area below Tamarapakkam anicut. 10. Components of supply. 11. Water required for Madras City. 12. Water required for Irrigation. 13. Evaporation and Percolation. 14. Yield and supply curves. 15. Data for yield curves. 16. Data for supply curves. 17. Total yield. 18. Available yield. 19. Storage required to make best use of water. 20. Conclusions. 21. Further inquiries suggested by this investigation. 22. Existing Statistics. 23. Cost of pumping at Red Hills. 24. Pumping required with scheme now in course of execution. 25. Effect of pumping on the health of the City. 26. Raising of F. T. L. of Red Hills Tank in order to diminish pumping. 27. Bund Section. 28. G. O.s relating to raising F. T. L. of Red Hills Tank. 29. Increased storage obtained by raising F. T. L. by 1½ feet. 30. Effect of also raising lowest irrigation level by 1½ feet. 31. Gain to irrigation in good seasons. 32. No loss sustained by irrigation in dry years. 33. Figures shewing gain in good seasons resulting from proposed alterations. 34. Illustration of gain during good years due to proposed alterations. 35. Example of effect of alterations in years when monsoon fails. 36. Increased consumption will increase revenue. 37. Importance attached by Government to Madras Water-supply. 38. Effect on revenue of increased Water-supply to Madras. 39. Importance of collecting data. 40. Summary of results of the investigation into available water-supply. 41. Existing Rules for the regulation of water in the Cholavaram and Red Hills Tanks.

1. The question of the quantity of water available for the supply of Madras from existing sources, is one which may appear to have little connection with the distribution of water in the City. It is indeed a subject that would, as a rule, be more properly investigated as a preliminary to preparing the water-supply project for a City. It will, therefore, be well to give an explanation of the reasons why the investigation has been taken up in this report. **Reasons for this inquiry.**

After very careful consideration, Government, in G. O. No. 609-M., of 22nd March, 1907, sanctioned a scheme to provide 25 gallons per day per head of the population of Madras City. This scheme is now in course of execution.

To provide a larger supply—of say 50 to 75 gallons per head per day, as has been proposed—would mean large additional works and a great additional expenditure, such as would lay a heavy burden upon the rate-payers.

2. At the same time, 25 gallons per head per day is likely to be exceeded unless the supply is carefully conserved, and in paragraph 33 of his Note of 20th February, 1909, on a scheme for the improvement of the distribution system, **Quantity of water to be supplied to Madras.**

the writer pointed out that the supply of 25 gallons per head per day, provided by the new scheme, would be insufficient to meet the demand, unless every possible precaution were taken to prevent waste. To enforce this important point, attention was drawn to the Bombay consumption of 40 gallons per head per day and the Calcutta supply of 27·6 gallons of filtered water plus 20 gallons of unfiltered water per head per day.

In these circumstances the proper course—as it appears to the writer—is to take every possible precaution to prevent waste and ensure that the supply of 25 gallons per head shall be sufficient for the requirements of the inhabitants, as it should be, if there is no waste or mis-use.

That this is not the unanimous view of the Corporation was shown at a meeting of the Waterworks Bye-laws Committee held on 10th August, 1909. The meeting was convened for the purpose of informing the Special Engineer what views the Commissioners held on his proposals for improving the Water-supply Distribution of the City. At this meeting—although no definite recommendation was made—it was strongly urged by certain members of the Committee that a supply of at least 75 gallons per head per day should be provided, and from what was said, the Special Engineer judged that this view would be advocated before the Corporation when his report should come up for consideration. It seemed unwise to prepare a scheme to supply 25 gallons per head per day if the Corporation were going to demand 75 gallons, and since Government had decided on 25 gallons per head per day, as the supply to be provided, the writer deemed it proper to consult the Chief Engineer to Government. When asked whether he would advise Government that, in the circumstances, 25 gallons per head per day was all that need be provided, the Chief Engineer—at that time Mr. F. J. Wilson—was not prepared to commit himself, and advised that the quantity available for supply should first be ascertained. Thus it is that the present investigation was undertaken.

Other questions arising from inquiry.

3. In the course of collecting the necessary data, there have arisen several questions of great importance to the water-supply of the City, and they are included in this Report as a convenient way of bringing them to the notice of the Corporation and Government. Among such questions are those of—

(1) Increasing the storage capacity of the Red Hills Tank.

(2) Raising the lowest level for the issue of irrigation water from Red Hills Tank.

(3) The effect of pumping at Red Hills upon the health of the inhabitants of Madras.

These problems will be dealt with in their natural sequence.

Description of Water-supply Works.

4. In order that there may be no difficulty in following the discussion, it is here necessary to describe briefly the existing Waterworks.

The Madras Water-supply is part of a project undertaken with the object of utilising, to the fullest economical extent, the water of the Corteliar river and its tributaries. This is done by means of an anicut built across the Corteliar river at a place called Tamarapakkam (*see* Plate No 2.) This anicut diverts the river—excluding the greater flood discharges— into a channel which

feeds the Cholavaram and Red Hills Storage Tanks. From the lower of these—the Red Hills Tank—is drawn the Madras Water-supply. The water from the tanks is also used to irrigate a first crop area of 7,500 acres, and a second crop area of 3,200 acres. The water thus used for irrigation is about 3 times the present water-supply to Madras.

The Red Hills Tank is fed partly by rain falling on its own catchment area, but mainly from Cholavaram Tank which in its turn is supplied from the Corteliar river itself by means of the channel starting at Tamarapakkam anicut, and also by the rivers Katankal and Boosikal (tributaries of the Corteliar) which are intercepted by the same channel that carries the waters of the Corteliar to Cholavaram Tank. The origin of the Corteliar river is the overflow from the Kaveripakkam Tank, but the water flowing down the Corteliar is diverted into the Cooum river by the Kasavaram anicut about 25 miles below Kaveripakkam Tank, and the catchment area above this point must be deducted from the total catchment area of the Corteliar in calculating the water available.

The catchment areas of the system are shown clearly on Plate No. 2, they are as follows:—

Rivers Corteliar, Tirutani and Nagari above Tamarapakkam anicut (coloured Yellow and Violet) ...	1,105	sq. miles.
Red Hills Tank (coloured Pink)	23	„
Cholavaram Tank do.	11	„
Katankal River (coloured Green)	62	„
Boosikal River do.	44	„
Total	1,245	„
Deduct catchment area of River Corteliar above Kasavaram anicut (coloured Violet)	268	sq. miles.
Net catchment area	977	

The capacity of Red Hills Tank at its present F. T. L.*
(44·36 G. T. S.†) is ... ... 2,162,000,000 cub. feet.

The capacity of Cholavaram Tank at its present
F. T. L. (59·73 G. T. S.) is 579,000,000 cub. feet.

Detailed figures of the capacity and water spread of Cholavaram and Red Hills Tanks are given in Appendix No. 3.

The average rainfall over the whole catchment area may be taken as 37 inches per annum. Plate No. 2 shows clearly the different catchment areas.

The works so far described are required for both irrigation and water-supply. The Corporation made no contribution towards the cost of their construction which was borne wholly by Government. Their upkeep and maintenance are in the hands of the Government P. W. D. For water taken from the lake for the supply of Madras City, the Corporation pay Re. 1 per 1,000 cubic yards or a little less than one-tenth of one anna per 1,000 gallons. The Corporation also maintain a staff of men to prevent contamination of the Red Hills Lake by cattle-washing, fishing, bathing, &c.

The works required to convey the water from Red Hills to Madras were constructed solely by the Corporation, who also maintain them. The

* F. T. L. = Full Tank Level.
† G. T. S. = Great Trigonometrical Survey.

existing works comprise a valve house situated at the south-east corner of the Red Hills Tank and an earth *delivery channel* which conveys water to Madras City. The valve house contains the machinery for controlling the four valves, one on each of the four pipes which lead from the lake through the valve house, and continue on to the delivery channel.

The delivery channel has earth sides and bottom. It is 6½ miles long with a gradient of 3 inches per mile. Most of this channel is carried upon an embankment, only a small portion being in cutting. At the Madras end the channel delivers its water into a masonry shaft 22 feet in diameter, from which lead the cast-iron mains of the city distribution system.

The chief faults of the channel are—

(1) It taps the lake at too high a level, and, in consequence, for considerable periods during every alternate year, pumping is necessary to raise the water into the channel even though there is still plenty of water in the lake.

(2) Serious loss of water in transit. By evaporation from its 6½ miles of water surface, and by percolation through its 13 miles of bank, the channel loses a large proportion of the water that enters it from the Red Hills Tank.

(3) The channel will not carry enough water to supply the increasing requirements of Madras.

(4) The channel is contaminated by persons bathing in it, or throwing things into it, by cattle that find their way to it in spite of the Corporation patrol, and lastly by the coolies who are in it every day cutting the quick-growing weeds which thrive in the slowly-moving water.

To remedy these faults, the Corporation are constructing an underground covered conduit 7 miles long with an average gradient of 1 in 4,470. The conduit wlll deliver its water to the new filters now in course of construction at Kilpauk. By means of this conduit the above mentioned faults of the channel will be remedied as follows :—

(1) The conduit will tap the lake seven feet lower than the bottom of the existing channel, thus rendering available, without pumping, 670,000,000 cubic feet of water, all of which is below the existing intake, and which at present can be rendered available only by undesirable pumping which stirs up, and sends down to Madras, the silt lying on the lake bottom.

(2) There will be no loss by evaporation and percolation.

(3) The carrying capacity of the conduit will be sufficient to supply Madras with 25 gallons of water per head per day for many years.

(4) The covered underground conduit will render impossible all ordinary contamination, such as that to which the Open Channel is liable.

In addition to the conduit, the Corporation are also constructing the following important works :—

(*a*) Sand filters to purify the water.
(*b*) Pure water tanks to store the filtered water.
(*c*) Pumps to raise the water to an adequate pressure.
(*d*) An elevated tank to ensure the maintenance of a steady pressure in the mains.

The last two works are respectively described in detail in Sections IV and V of this report.

Plate No. 3 shows diagrammatically the works connected with the irrigation and water-supply systems, beginning with the Tamarapakkam anicut and ending with the Distribution System in Madras. The existing works are shown by blue lines. The new works, in course of construction and proposed, are shown by red lines. Plate No. 4 shows the levels of the new and existing works.

Quantity of water available.

5. To determine the quantity of water available, a great many papers have been examined. The Chief Engineer to Government for Irrigation has been addressed ; he has very kindly furnished a number of figures, and has also indicated the value of the records available.

In brief, it may be said that there are fairly accurate measurements of the water which is turned down the supply channel at Tamarapakkam anicut and also of the surplus water which overflows the Tamparapakkam anicut and continues as the Corteliar river.

There are, however, no measurements of any value of the water which is issued for irrigation, nor of the water which flows to the Cholavaram and Red Hills Tanks from the catchment area below Tamarapakkam anicut.

In making an estimate of water available, and of the demand for Madras and for irrigation, certain assumptions have to be made. The figures must necessarily be approximate. Refinement in calculation would be out of place and has not been attempted.

The results of a study of the available measurements, and a careful estimate of the quantities not measured, are shown graphically in Plate No. 5, for it is by the graphic method that the problem can best be studied.

The two quantities to be considered are :—

(1) The available yield.
(2) The supply to be provided.

Available Yield.

Components of available yield.

6. *The available yield* is the water which can be collected and turned into the Cholavaram and Red Hills Tanks. It consists of :—

(*a*) Water turned down the channel by means of the anicut which has been thrown across the Corteliar river at Tamarapakkam.
(*b*) Water at present allowed to overflow down the river at Tamarapakkam.
(*c*) Water draining to the Cholavaram and Red Hills Tanks off the catchment area below the Tamarapakkam anicut.

These will now be examined in order.

Water diverted from Cortellar River by Tamarapakkam anicut.

7. *The water turned down the channel by means of the Tamarapakkam anicut* has been fairly accurately measured since 1890, and the figures supplied by the Chief Engineer for Irrigation have been used in plotting the yield curve on Plate No. 5. The figures themselves are given in Appendix No. 2. Measurements previous to 1890 are unreliable.

Overflow at Tamarapakkam anicut.

8. *The quantity of water at present allowed to overflow down the river at Tamarapakkam anicut* is considerable in some years, but in others it is practically *nil*, as the following figures show :—

Year.	No. of days on which there was overflow.	Average depth over weir in feet during overflow.
1894	34	0·24
1895	39	0·47
1896	51	0·79
1897	36	0·70
1898	78	1·06
1899	15	0·58
1900	2	0·38
1901	18	1·09
1902	84	0·73
1903	132	1·09
1904	2	0·36

From this table it is seen that in a period of eleven years there are two years—and those so close as 1900 and 1904—in which there was overflow on two days only. That is to say, there is no overflow which can be reckoned on in the driest years, and it is only by means of a large storage reservoir that the overflow from previous years could be utilised.

Furthermore, part of the overflow is required for the irrigation of 6,500 acres of land below the Vallur anicut—shown on Plate No. 2. The Public Works Department estimate that from a storage point of view, this area would require 1,300 million cubic feet, and from the point of view of continuous flow, a safe figure would be 2 cubic yards per acre per hour or a total of 8,424,000 cubic feet per 24 hours. It would be unwise, therefore, to count upon any of the overflow water being available for use during the driest years—and it is the driest years that determine problems of water-supply.

In order that the effect of this surplus discharge may be evident, it is included in the "Total yield" curve shown by a dotted black line on Plate No. 5. It is, however, not included in the "available yield" curve shown by the full black line.

Yield from catchment area below Tamarapakkam anicut.

9. *The water draining off the catchment area below Tamarapakkam anicut* has not been measured, and it is exceedingly difficult to fix a co-efficient of discharge to apply to this area. It is a bad type of watershed from a yield point of view. The soil is so porous and the ground is so flat that the rain falling upon it is readily absorbed. Even when the ground is saturated, it is not until the 141 tanks in the area have been filled, that any water becomes available for the Cholavaram and Red Hills Tanks.

In these circumstances the writer consulted the Public Works Department and is indebted to Mr. S. D. Pears, Superintending Engineer, for the information on which are based the conclusions arrived at in this paragraph.

In calculating available supplies for new projects in the Madras Presidency it is usual to estimate the yield from the two monsoons separately, on the assumption that there is a "break" of dry weather between them. This is equivalent to assuming that the ground becomes as dry before the North-east monsoon as it was before the South-west monsoon. This assumption undoubtedly errs on the safe side. For the present purpose it will be probably more accurate to assume the two monsoons continuous from June to December inclusive.

As a result of the rainfall measurements for the last 30 years, at Red Hills, Cholavaram and Tamarapakkam, the monsoons may be divided into 14 and 27 inches respectively.

Applying the figures given in Strange's "Indian Storage Reservoirs" for a "bad" catchment and calculating the two monsoons for 14 inches and 27 inches separately, the yield from a catchment of 140 square miles is 1,194 million cubic feet per annum. Calculating for the monsoons as continuous and the catchment as "average" the yield is 3,860 million cubic feet per annum.

It is probable that the mean between these two figures (which represent the worst possible and the best possible hypotheses, respectively), *viz.*, $\frac{1194 + 3860}{2} = 2{,}527$, say 2,500 million cubic feet per annum, is fairly near, and rather below than above, the truth.

From the figures supplied by the Public Works Department the tables given in Appendix No. 2 (pp. 162—171) have been prepared. It is calculated that the average yield from 1890 to 1908 for the catchment area above Tamarapakkam anicut was 9,000 million cubic feet per day. Taking the figure 2,500 million cubic feet as the probable average annual yield of the area draining into the Red Hills and Cholavaram Tanks from the catchment area below Tamarapakkam anicut, then the relation between the discharges of the two areas is as 9,000 : 2,500 or as 3·6 : 1. This relation has been used for obtaining the yield figures in this report. Thus, in calculating the total yield throughout the series of years (1890 to 1908) used for the diagram Plate No. 5, the direct measurements at Tamarapakkam anicut have been used for the discharge of the catchment area above the anicut. For the discharge below the anicut, the relation above given ($\frac{1}{3{\cdot}6}$) has been applied to the individual discharges in order to obtain the approximate yield of the catchment area below Tamarapakkam anicut.

The area of the catchment basins are 837 and 140 square miles respectively, or approximately as 6 is to 1. Therefore, taking the above relation for the discharges, it follows that the average discharge per square mile is greater for the area below Tamarapakkam anicut than for the area above Tamarapakkam anicut in the proportion of 10 to 6. At first sight this would appear surprising in view of the hilly nature of part of the larger catchment area, for the proportion of run-off to rainfall should be greater in a hilly district than in a flat district. With regard to this point, it may be remarked that though the number of tanks in the larger area is proportionally less than in the smaller area—there are 613 tanks in 837 square miles as against 141 in 140 square miles, yet because the former (613) are of greatly larger average capacity than the latter (141), it is found that the storage provided per square mile—and therefore the loss by percolation and evaporation—is decidedly greater in the case of the larger

watershed. In addition, the average rainfall at Arkonam, about the middle of the 837 square miles catchment, is only 38 inches per annum against 49 at Madras. Furthermore the hills at the source of the Nagari river are in the most rainless part of the basin so that the rainfall there provides a proportionately small run-off.

Finally the discharge per unit area for a given rainfall from a small compact catchment is greater than for a large catchment area where the water flows over a large area, which, at the beginning of the rains is dry and parched, and absorbs a large quantity of water.

When all these factors are taken into account it is seen that the estimated yield of the catchment draining directly to Red Hills and Cholavaram is not unreasonably high compared with the measured yield from the catchment above Tamarapakkam anicut.

A reference to the curves (Plate No. 5), and to the actual records as plotted in Plate No. 6, will show, that the yield calculated in the manner set out above, agrees closely with actual experience, inasmuch as the water, while sufficient in most years for both irrigation and the present supply to Madras, would, according to the calculated yield, prove to be deficient in a few years. This is in accordance with actual experience, and on account of this deficiency remission has had to be paid to the cultivators—as for example in 1904-5.

Supply to be provided.

Components of supply.

10. *The supply to be provided from the yield* is for :—

(*a*) The City of Madras Water-supply.

(*b*) Irrigation.

(*c*) Evaporation and percolation.

The last would more properly perhaps be treated as a deduction from the gross yield, but it is more convenient to consider it as part of the supply which has to be provided.

Water required for Madras City.

11. *The water-supply for the City of Madras* has been taken as 25 gallons per head per day for a population of 660,000,—equivalent to 963, or in round figures, 1,000 million cubic feet per annum. This figure has been used in plotting the full demand line on Plate No. 5. If the supply be taken as 75 gallons per head per day for the same population, then the quantity of water to be provided would be 3,000 million cubic feet per annum. This figure has been used in plotting the dotted demand line on the same diagram.

Water required for Irrigation.

12. *The water required for irrigation* can only be estimated, as no accurate measurements are available.

The full ayacut (or area to be irrigated), under the Cholavaram and Red Hills Tanks, is limited by G. O. No. 205-I to 7,500 acres for the first crop September to February and 3,200 acres for the second crop March to June.

Taking the supply for the first crop at 200,000 cubic feet per acre, and the second crop at 170,000 cubic feet per acre, then the quantities of water required for irrigation every year are :

September to February $7{,}500 \times 200{,}000 = 1{,}500{,}000{,}000$ cubic feet.

March to June $3{,}200 \times 170{,}000 = 544{,}000{,}000$ cubic feet.

These figures have been used in plotting the demand curve Plate No. 5.

Evaporation and Percolation.

13. *Evaporation and Percolation* may be taken as amounting to 9 feet vertically per annum. The evaporation will depend largely on Meteorological conditions. On the one hand, it will be practically *nil* when rain is falling and when the atmosphere is saturated with moisture; on the other hand, it will be considerably above the average during hot sunny weather when the air is dry. These two influences to some extent neutralize each other, because the rise and fall of water in the lake cause the area, from which evaporation takes place, to be less during dry hot weather than during wet and colder weather. The percolation will also be greater in wet weather when the level of the lake is high, than in dry weather when the water level is some feet lower. In view of these considerations the evaporation and percolation have been treated as causing loss of water at the uniform rate of 9 feet vertically per annum, over an average area of 140,000,000 square feet for Red Hills Tank and 42,000,000 square feet for Cholavaram Tank, giving a total loss due to these causes of 1,638 million cubic feet in the year. This is probably slightly in excess of the quantity actually lost.

Graphic Representation of Yield and Supply.

Yield and supply curves.

14. The two quantities (*a*) the yield of the catchment area drainable to the Red Hills Tank, and (*b*) the demand which has to be supplied under different assumptions, are shown by means of curves on Plate No. 5. The abscissæ of these curves represent time, and the ordinates represent quantities of water in millions of cubic feet. Both sets of quantities have been calculated on the basis of the conclusions arrived at in the preceding paragraphs.

Data for yield curves.

15. The figures for yield—as deduced from measurements and calculations—would occupy too much space if inserted here. They are therefore placed in Appendix No. 2

Data for supply curves.

16. In plotting the supply curves, the different components have been calculated from the following data:—

		Millions of cubic feet per annum.	
Water-supply to City of Madras			
Present supply (mean for ten years) ...		583	
Future supply provided by new scheme: 25 gallons per head per day for a population of 660,000		1,000	
Hypothetical supply: 75 gallons per head per day for a population of 660,000... ...			3,000
Irrigation—			
First crop 7,500 acres @ 200,000 cubic feet per acre	1,500		
Second crop 3,200 acres @ 170,000 cubic feet per acre	544	2,044	2,044
Evaporation and Percolation			
Red Hills Tank 140,000,000 square feet by 9 feet.	1,260		
Cholavaram Tank 42,000,000 square feet by 9 ft.	378	1,638	1,638
Total with water-supply of 25 gallons per head per day		4,682	
Total with water-supply of 75 gallons per head per day			6,682

From these data have been plotted the curves on Plate No 5. The yield is shown by black lines, and the supplies to be provided under different assumptions are shown by red lines.

Total yield.

17. The total estimated yield of the whole catchment area of 977 square miles is represented by a dotted black line. It is seen to be sufficient to supply the maximum quantity of water required for irrigation and also—as shown by the top red curve—to provide 75 gallons per head per day to a population of 660,000. But to render the water available for these purposes, an immense storage would be required. By superposing the demand curve on the yield curve, and making a due allowance for increased percolation and evaporation, it will be found that the necessary storage would be as much as 25,000 to 30,000 million cubic feet or about ten times the combined capacity of the Red Hills and Cholavaram Tanks. There is no site suitable for so enormous a reservoir, and it may be said at once that, from the present sources of supply, it is quite impossible to provide 75 gallons per head per day for the population of Madras City, if the requirements of irrigation are also to be met.

Indeed, the "Total Yield" curve is of little practical use, because so large a proportion of the water comes down during times of high flood in those years when the rainfall is exceptionally heavy. In order to render this flood water available for use, reservoirs capable of storing three years average flow would be required to meet the deficiency in those series of dry years that occur periodically when the moonsoon fails wholly or in part.

Available yield.

18. More useful is the "available yield" curve which is shown by a full black line. For the reasons given in paragraph 8, page 16, it would not—with our present knowledge—be advisable to count upon a greater yield than is represented by this curve.

From Plate No. 5, it will be seen that the maximum yield available is about 70,000,000,000 cubic feet in 19 years or 3,700,000,000 cubic feet per year. In the past the supply required for all purposes has been 4,100,000,000 cubic feet per annum and the average shortage would be about 400,000,000 cubic feet per annum. This shortage has to be met from irrigation supplies which have therefore been deficient to the extent of about 20 °/₀ of the water required for the maximum area. After deducting from the 3,700,000,000 cubic feet the loss by evaporation and percolation—estimated at 1,638,000,000 cubic feet per year—the amount available for irrigation and water-supply is 2,062,000,000 cubic feet per annum. If all irrigation were stopped, then this 2,062,000,000 cubic feet per annum would be sufficient to supply a population of 660,000 with 53 gallons per head per day.

From existing sources then, the greatest quantity of water which could be supplied to a population of 660,000, if all irrigation were stopped, would be about 50 *gallons per head per day, provided adequate storage were provided* to catch and hold it.

For a population of 660,000—35 *gallons per head per day is approximately the greatest quantity which could be supplied continuously with existing tanks, even if all issue of water for irrigation were stopped.*

19. In order to render available every year the full quantity of 3,700,000,000 cubic feet mentioned in the last paragraph, a large storage is necessary, especially in those hot seasons which follow a failure of the monsoon. **Storage required to make best use of water.**

The amount of storage required for the years 1890 to 1908 may be determined from the available yield curve on Plate 5. For the worst years the required storage was—

1895	...	4,000,000,000 cubic feet.
1898	...	5,000,000,000 ,, ,,
1901	...	4,500,000,000 ,, ,,
1905	...	3,200,000,000 ,, ,,

From these figures it will be seen that a storage of 5,000,000,000 *cubic feet should be provided.*

The actual storage available is—

Cholavaram Lake above the Channel Sluice	...	500,000,000 cubic feet.
Red Hills Lake above the lowest draw off of works now under construction	...	1,712,000,000 ,, ,,
Total	...	2,212,000,000 ,, ,,

If the F. T. L. of Red Hills Lake is raised by 18 inches, and, if in addition, a bund 18 inches high is allowed on the top of the raised weir, then the storage of Red Hills Lake will be increased by 583,000,000 cubic feet and the available storage capacity of the two tanks will become 2,795,000,000 cubic feet.

20. A close examination of the available yield curve in conjunction with the supply curves shows clearly that, without additional and very costly works, *a supply of* 75 *gallons per day per head of the population of Madras cannot be provided during dry years from present sources, even if all irrigation supplies are stopped.* **Conclusions.**

It was to determine this point—the feasibility of supplying Madras City with 75 gallons per head per day—that the present investigation was undertaken. In addition to deciding this question, the following facts are also brought out by a study of the curves :—

(1) That with the supply of 25 gallons per head per day for a population of 660,000 as provided by the new scheme, there will, in many years, be insufficient water to meet fully the needs of irrigation, and in some years there will be barely sufficient to supply Madras City.

(2) That with the quantity of water now supplied to Madras, the water available would, in dry years, be insufficient for both irrigation and water-supply. This is what has actually been found to be the case in recent years when on the average the irrigation supply has had to be curtailed every other year in order that the city should not suffer a water famine, thus proving that the yield as above estimated is at least approximately correct.

(3) The available yield is 3,700,000,000 cubic feet per annum. This will supply a population of 660,000 persons with 50 gallons per head per day, if all irrigation were stopped.

(4) A storage of 5,000,000,000 cubic feet is required to render available the yield of 3,700,000,000 cubic feet every year. With the present storage the largest supply that could be provided if all irrigation supplies were stopped, would be about 35 gallons per head per day for a population of 660,000.

(5) As the existing useful storage is only 2,212,000,000 cubic feet, it is highly desirable that the storage of the system should be increased.

(6) The question of restricting Red Hills Lake to the supply of Madras City is one which will have to be considered before long.

The above conclusions are of very great importance. Unfortunately—though they are believed to be approximately accurate—still they are based largely upon hypothesis and estimate, and this fact points to the immediate importance of at once instituting accurate measurements of both receipts and issues of water.

Further inquiries suggested by this investigation.

21. Seeing that the yield is not always sufficient to meet the present demand, it is obvious that it will be still more inadequate to supply the greater demand which will ensue when the new waterworks have doubled the supply to Madras City.

The investigation having led to this conclusion, the writer considered it his duty to ascertain—

(1) What results would follow from the shortage.

(2) What means should be adopted to minimise the evil consequences which might be expected.

The first step was to examine existing statistics.

Existing Statistics.

22. Records of the water level in the Red Hills Lake from 1891 to 1910 were obtained from the Chief Engineer for Irrigation, and the Corporation Engineer provided a list of days on which pumping had to be resorted to because the water in the lake was too low to flow down the Delivery Channel.

In order that the meaning of these figures may be readily understood they have been plotted as curves on Plate No. 6. These curves represent actual facts and are not based on any theoretical considerations. They show clearly to what extent pumping has been necessary. It must be remembered that this pumping was required during a period of years when Madras City was supplied with water altogether insufficient in quantity for the needs of its inhabitants. If the supply had been adequate, pumping would have been more frequent and would also have been prolonged over greater periods.

23. The dates on which pumping was necessary from 1885 to 1910, and the cost of pumping, are given in the following table :— Cost of pumping at Red Hills.

Red Hills Pumping—1885 to 1910

Year.	Dates of Pumping.	No. of days pumped.	Expenditure.
			RS.
1885-86	May to November	210	34,765
1886-87	No pumping	...	...
1887-88	31-5-87 to 14-10-87	137	23,365
1888-89	No pumping	...	...
1889-90	Do.	...	4,398
1890-91	Do.	...	491
1891-92	10-6-91 to 26-10-91	139	22,235
1892-93	4-5-92 to 28-8-92	117	18,302
1893-94	3-8-93 to 4-11-93	94	17,186
1894-95	No pumping	...	6,175
1895-96	Do.	...	7,241
1896-97	Do.	...	4,446
1897-98	Do.	...	601
1898-99	22-7-98 to 12-9-98	53	20,728
1899-00	No pumping	...	...
1900-01	6-7-00 to 21-11-00	139	26,332
1901-02	2-4-01 to 13-11-01	226	40,767
1902-03	1-8-02 to 5-9-02	36	12,393
1903-04	No pumping	...	...
1904-05 / 1905-06	29-1-05 to 21-10-05	266	53,933
1906-07	No pumping	...	495
1907-08	2-9-07 to 7-11-07	67	11,872
1908-09	8-7-08 to 21-9-08	76	12,279
1909-10	No pumping	...	219
1910-11	17-5-10 to 2-9-10	109	18,308
	Total	1,669	3,36,531
	Average per annum	64	12,943
		say	13,000

If allowance is made for interest on capital and depreciation of machinery, then Rs. 3,000 per annum should be added to the above, and the total average cost of pumping per annum becomes Rs. 16,000.

Pumping required with scheme now in course of execution.

24. An examination of the curves on Plates Nos. 6 and 8 will show that for the 20 years from 1891 to 1910 with the lowered draw-off of 31·13 which has been adopted for the new supply, there would, with the present consumption, have been only a very slight amount of pumping in 1901 and 1905, say, once in 10 years.

With the maximum consumption which is provided for by the new scheme, however, there would have been pumping in 1892, 1893, 1894, 1901, 1905 and 1910, that is 6 years or once in every 3⅓ years. And in many of these cases the pumping would have been continuous for a long period.

With the increased supply which is to be provided by the Works now in course of construction, it may reasonably be assumed that the extra cost of pumping a large quantity will be counterbalanced by the saving owing to the shorter periods during which pumping will be necessary, and that, therefore, an average annual expenditure of Rs. 16,000 may be anticipated on this account when the full quantity of 25 gallons per head per day is being supplied to a population of 660,000.

Effect of pumping on the health of the City.

25. The late Health Officer was consulted as to the best index of the effect of pumping on the health of the City. He advised that the cholera returns should be taken.

Adopting this advice, the death-rate from cholera from January 1891 to November 1910 has been plotted on the diagram in Plate No. 7, and on the same diagram are shown the levels of water in Red Hills Lake and the days on which there was pumping.

An examination of the curve shows that almost invariably an epidemic of cholera synchronises with pumping at the Red Hills, and that, the longer the pumping period, the worse the cholera epidemic. The only case in which there was serious cholera without pumping was in 1906. In that year it may be safely assumed that the disease germs survived from the previous year which had witnessed the most deadly cholera outbreak of recent times, following the longest recorded period of pumping. In every year without exception when pumping has been necessary there has followed a more or less violent epidemic of cholera.

There is thus an undeniable connection between pumping and cholera death-rate.

It is well known by those in charge of the water mains that there is always more sediment in the City pipes when pumping is in progress, and it is generally agreed that, by pumping, the silt at the bottom of the lake is stirred up and carried along with the water supplied to the City. This sediment would irritate the coats of the digestive organs of water drinkers and would thus render them susceptible to cholera.

Another possible explanation of the relation of cholera to pumping is that, when pumping is resorted to, the supply is restricted, and consequently the inhabitants are driven to obtain water from the badly polluted wells which abound in the City. This may be the correct explanation, even though the records of water sent down the channel from Red Hills Lake show that the quantity is the same whether there is pumping or not, there is, however, undoubtedly greater scarcity during the hot weather—due probably to the greater quantity of water used by those whom the water reaches first for drinking, watering and washing, with the result that those furthest away from the source have less at this season than during the rest of the year.

The true reasons, therefore, why cholera closely synchronises with pumping at Red Hills would seem to be three-fold, *i.e.*—

(1) Shortage of water causing people to resort to wells and tanks.

(2) Muddy water from Red Hills predisposing to cholera.

(3) The unfortunate coincidence of (1) and (2) with that period of the year most favourable to cholera.

Unquestionably the new filters will remove much of the sediment, but only at the expense of rapid clogging necessitating frequent cleaning, that costs money and uses valuable water. Further, the best filter ever constructed cannot be depended on to remove all bacilli, and failure to work the filters properly might result in serious loss of life. Prevention is much better than cure in such cases, and the pollution of the water due to pumping should be prevented as much as possible.

It may then be concluded that with the conditions which will be brought into existence upon the completion of the new Waterworks —

(1) An average annual expenditure of about Rs. 16,000 may be anticipated on account of pumping.

(2) The danger of an increased death-rate as the result of pumping will still exist, though not to the same extent as at present.

Raising of F. T. L. of Red Hills Tank in order to diminish pumping.

26. It is therefore highly desirable to limit the periods of pumping as much as possible on the grounds both of expense and of public health. The most obvious way of doing this is to increase the storage capacity of Red Hills Tank by raising the top water level.

As orginally designed the tank had a top water level of 47·36 feet above mean sea level (G. T. S.). The tank was filled to this level without suffering any damage, until November 1884, when a cyclone produced waves which dashed up the pitched slope and over the unprotected top of the bund, washing away the supporting earth and causing a breach.

To prevent a recurrence of this disaster, the top water level was shortly afterwards lowered by 3 feet to 44·36 feet above mean sea level. Since then, however, three preventive measures of great value have been carried out. Firstly, a vertical stone crest wall has been constructed above the top of the bund in exposed places, this should prevent waves washing over the top even in severe storms. Secondly, additional sluices have been installed, so that in case of need, water can be run off rapidly from the lake. Thirdly, a screen wall has been built to protect the sluice operators; the necessity for this last measure was demonstrated when the bund was breached in 1884, for on that occasion it was found very difficult to open the sluices owing to the waves which broke over the men.

Now that these three useful works have been carried out, there is every reason to believe that the top water level may with safety be raised by 18 inches to 45·86 feet above mean sea level, and that yet another 18 inches may be added safely by means of an 18-inch temporary clay or turf bund placed on the top of the newly-raised weir, so that the water may be held up to 47·36 at certain seasons of years when there is enough water.

Bund Section.

27. When the tank was first filled and for a number of years afterwards—1870 to 1880—much trouble was caused by slipping outwards of the bank. This was remedied by thoroughly draining the rear of the affected portions. It has, however, been considered advisable to look into the question of the stability of the bank if the top water level should be raised as proposed.

TYPICAL SECTION
OF
RED HILLS TANK BUND
SCALE $\frac{1}{200}$

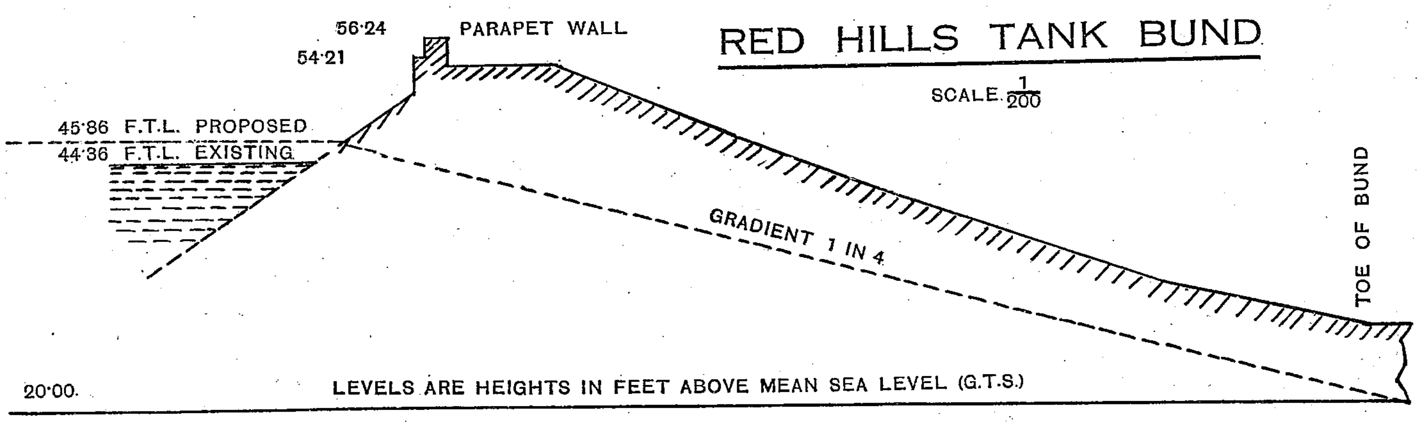

The above figure shows a typical section of the Red Hills Tank bund. It was kindly supplied by the Superintending Engineer, V Circle. On this section is plotted a gradient line of 1 in 4 which may be taken as approximately the hydraulic gradient of the surface of saturation. This line has been drawn from the point where the proposed normal top water level (45·86 or 18 inches higher than at present) cuts the water side of the bund. It will be seen that the surface of saturation is well below the outside slope of the bund and that, therefore, there is no danger of the bank slipping now that it is properly drained, even if the water be held up to 47·36 feet above the mean sea level by means of an 18-inch turf bund placed on the raised weir as proposed above.

G. O.s relating to raising F. T. L. of Red Hills Tank.

28. There is little doubt that the raising of the full supply level of the Red Hills Tank would be of great benefit to the Corporation, provided the increased storage so obtained—or the greater part of it—were reserved for the water-supply of Madras, as can be done by raising the lowest level at which water is issued for irrigation.

The Sanitary Board, in paragraph 3 of its Proceedings No. 39-S., dated 3rd February, 1906, dealing with the new Water-supply Works, then under consideration and now in course of execution, pointed out that it was a matter of vital importance that a low weir should be provided with lifting shutters which will enable water to be held up at any time to a height of 18 inches above the present Full Tank Level.

Government estimated that such shutters could be provided at a cost of Rs. 72,000, but were not prepared to contribute towards the cost from Irrigation Funds (G. O. No. 4891, dated 23rd May, 1905).

It will, however, well repay the Corporation to bear the cost of carrying out this work, *provided that the lowest level at which water is issued for irrigation be also raised.*

That the raising of the lowest irrigation level is a reasonable proposal, and was originally contemplated, is proved by the inspection notes of Mr. Hughes, Chief Engineer for Irrigation (G. O. No. Mis. 118 M., 18th January, 1898), who wrote: "If shutters were fitted on the weirs, we could agree to refuse water for second crops when the level fell to 1 or 2 feet above that at which irrigation water is now cut off, and this is all that the Municipality would require."

Recently Government have passed orders (see G. O. No. 673 I., 20th June, 1906) declining to alter the level at which the supply of water for irrigation is stopped; but no doubt this Resolution will be modified, if sufficiently good reasons are brought forward.

Increased storage obtained by raising F. T. L. by 1½ feet.

29. The following figures give the increased storage that would be obtained by raising F. T. L. of Red Hills Tank by 18 inches :—

Capacity if F. T. L. be raised 1½ feet	... =	2,439,670,300 c. ft.
Capacity at present	... =	2,162,054,000 „
Difference (increase in contents)	... =	277,616,300 „

The increased storage available *for both Irrigation and Water-supply* will therefore be 277,616,300 cubic feet.

Effect of also raising lowest irrigation level by 1½ feet.

30. If the lowest level at which water is issued for irrigation be raised by 18 inches, then—

Capacity when irrigation is stopped	... =	1,500,000,000 c. ft.
Capacity at present	... =	1,325,000,000 „
Difference	... =	175,000,000 „

The increased storage reserved for the Madras Corporation Water-supply would be 175,000,000 cubic feet.

After allowing for evaporation and percolation this 175,000,000 cubic feet is sufficient to supply a population of 660,000 at the rate of 25 gallons per head per day for 30 days.

The curves plotted on Plate 8 show clearly the effect of raising the F. T. L., and lowest level of irrigation. The black curve gives the contents at different levels of Red Hills Tank and the red curves give the number of days' storage under different assumptions. From a study of these curves it will be seen that in years when the tank is filled to the proposed F. T. L. of 45·86 the period of pumping would be reduced by 42 days and if the 18-inch turf bund were allowed above this F. T. L. holding the water up to 47·36, then the periods of pumping would be reduced by about 70 days. Finally if irrigation were stopped altogether, then with an F. T. L. of 45·86, pumping would be reduced by 100 days and with an F. T. L. of 47·36 it would be reduced by 135 days. These figures refer to the maximum supply for which the works are designed, *viz.*,

25 gallons per day for a population of 660,000 or 16 500,000 gallons per day in all. Until this full supply is used the periods of pumping would be still further reduced over those just given.

The above figures have been calculated on the assumption that there is no fall of rain. As a matter of fact there generally is rain during the periods of pumping—the rains of July 1910 and September 1911 will be fresh in the memory of every one. All such rain would still further increase the reduction in the amount of pumping under the proposed conditions.

Gain to irrigation in good seasons.

31. Subtracting from the gross increase in storage the increased storage reserved for Madras water-supply we have 277,616,300 cubic feet less 175,000,000 cubic feet, which gives 102,616,300 cubic feet as the increase of storage that would be available for both Irrigation or for Water-supply.

It may, therefore, safely be concluded that in good seasons—those in which both tanks would fill—not only the Madras City Water-supply, but also irrigation would both be benefitted if the existing F. T. L. and the existing lowest irrigation level be both raised by 1½ feet.

The increase of 102,616,300 cubic feet obtained by raising *both lowest level of irrigation and top-water level*, is due to the flat sloping shores. As the lake is filled higher and higher it covers a greater and greater area, so that the top 18 inches of water covers an area very much larger than the bottom 18 inches of the lake.

No loss sustained by irrigation in dry years.

32. In those years in which the tank would not be filled to the present F. T. L., irrigation would not gain by the raising of F. T. L., but, also, *it would not suffer appreciably*, because, as a result of the increased storage and of raising the lowest level of irrigation, the water in the tank would not have sunk to such a low level in the previous dry season, as it would have done if the lowest level of irrigation had not been raised.

The only actual loss to irrigation in such dry years would be due to slight additional evaporation and percolation, caused by the comparatively small increase of water-spread and the slightly higher level of the water-surface, but this loss would be comparatively so small that it need not be taken into account.

Figures shewing gain in good seasons resulting from proposed alterations.

33. The following statement shows the quantities of water available for both irrigation and Madras Water-supply with the proposed alterations to the Red Hills Tank, compared with the quantities available under existing conditions. It is assumed that—to start with—the tank is just full, and that no water is coming in. The irrigation supply—until cut off—is taken as twice the rate of supply to Madras City, while evaporation and percolation are taken together as constant and equal to 1·6 times the supply to Madras City. The Madras City supply itself is taken as 25 gallons per head per day for a population of 660,000, this being the supply which the new works are designed to provide. These assumptions are at least approximately correct. Any small

error which may exist can have very little effect on the figures in the third column :—

—		Quantities of Water in Cubic Feet. Under existing conditions.		With F. T. L. and lowest level of irrigation, both raised 18 inches.		Increase under proposed conditions.	
Contents of Red Hills Lake below F. T. L.		2,162,054,000		2,439,670,300		277,616,300	
Contents of Red Hills Lake below lowest level of irrigation.		1,325,000,000		1,500,000,000		175,000 000	
Contents of Red Hills Lake below draw-off level of works under construction		4 50,000,000		450,000,000		......	
Water available for irrigation ...			363,937,000		408 552,000		44,615,000
Water available for Madras Water-supply.	Above lowest level of irrigation ...	181,968,000	518,968,000	204,276,000	608 276,000	22,308,000	89,308,000
	Below lowest level of irrigation down to lowest draw-off of works now in course of construction. ...	337,000,000		404,000,000		67,000,000	
Water lost by evaporation and percolation.	Above lowest level of irrigation ...	291,149,000	829,149,000	326,842,000	972,842,000	35,693,000	143,693,000
	Below lowest level of irrigation down to lowest draw-off of works now in course of construction ...	538,000,000		646,000,000		108 000,000	
Totals ...			1,712,054,000		1,989,670,000		277,616,000

From these figures it will be seen that—as a result of the proposed alterations—Red Hills Lake would in normal years store 12 per cent. more water for irrigation, and further the Madras City Water-supply above pumping level would be increased by 17 per cent. In order not to complicate the table no allowance has been made for Cholavaram Tank storage which would not be affected by the proposed alterations to Red Hills Tank. If Cholavaram Tank be taken into account, then the following quantities should be added in both the first and second columns—water available for irrigation 233,000,000 cubic feet. Madras City supply 117,000,000 cubic feet. Lost by evaporation and percolation 150,000,000 cubic feet.

Illustration of gain during good years due to proposed alterations.

34. It is very important from the Corporation's point of view that it should be made perfectly clear that raising the lowest level for the issue of water for irrigation by 18 inches *will not injuriously affect irrigation if the F. T. L. is also raised by the same amount*—18 inches.

So important does the writer consider it, that—at the risk of being tedious—it appears to him advisable to illustrate the argument by examples.

There are two typical sets of conditions to be considered, *viz.* :—

(1) *When the water available is sufficient* to fill Cholavaram Tank and also to fill the Red Hills Tank to the higher F. T. L. proposed.

(2) *When the water available is insufficient* to fill Red Hills Tank to the higher F. T. L. proposed, as well as filling Cholavaram Tank.

Each of these two sets of conditions will now be considered separately.

The diagram opposite illustrates graphically what the figures in the preceding table are intended to convey. The diagram is drawn to scale; horizontally 1 inch=15,000,000 square feet of area of Red Hills Lake, vertically 1 inch= 4 feet in depth.

The area coloured blue shows that portion of the water which is now available for both Madras Water-supply and also for irrigation, but which will be reserved solely for Madras Water-supply if the lowest level of irrigation be raised 18 inches as proposed.

The area coloured red shows the layer of water which will be added to the lake in normal years if the F. T. L. is raised 18 inches as proposed. This additional layer will be available for both Madras Water-supply and for irrigation; it is greater than the blue layer by the portion of the red layer which is cross-hatched. Of this additional water rather more than one-half would be available for irrigation, and to this extent irrigation would benefit in years of normal rainfall if the F. T. L. and the lowest level of irrigation were both raised by 18 inches as proposed.

Example of effect of alterations in years when monsoon fails.

35. *When the water available is insufficient to fill the tank to the higher F. T. L. proposed*, it is obvious that the benefit to irrigation is not as great as in the case just considered. At first sight indeed, it might appear that under the proposed new conditions the supply available for irrigation would be reduced. However a more careful consideration of the facts will show that under the worst assumptions, there would be the same quantity of water available for irrigation.

The conditions most unfavourable to the proposed—as compared with present—conditions, come into existence when there is insufficient water to fill the tank up to the present F. T. L. For in this case the area coloured red in the diagram on the opposite page would be non-existent, and it might appear at first sight that irrigation would lose its share of the layer of water coloured blue which, from being available in part for irrigation, would—with the proposed alterations—be reserved solely for Madras City Water-supply.

This is not the case however because, under the existing conditions, the water would—at the end of the previous year—have been drawn down to a lower level than under the proposed conditions, so that under the proposed conditions when the rain came it would not have filled the tank to so high a level, and the net result would be that the quantity of water available for irrigation would be identical in both cases.

To make the case perfectly clear, the following two examples are worked out to show what water would be available in years when the monsoon failed. The figures chosen are for two periods—1899 to 1901 and 1904 to 1906. The monsoons of 1900 and 1904 failed, and in consequence, it was necessary, to pump during the first period from 6th July, 1900, to 21st November 1900, and from 2nd April, 1901, to 13th November, 1901, a total of

365 days. During the second period pumping was necessary from 29th January, 1905, to 21st October, 1905, a total of 266 days. During all these days—under Government rules—no water could be issued for irrigation.

The quantities of water entering and leaving the Red Hills and Cholavaram Lakes and the levels of the water in Red Hills Lake are given in Appendix No. 4. To assist in the easy understanding of the figures, they have been plotted in the form of curves—see Plate No. 10 facing this page.

Three curves have been plotted for the periods under consideration—

(1) A red curve showing the levels of the water in the Red Hills Lake calculated on the assumption that the lowest level of irrigation and the F. T. L. of the tank are both raised by 18 inches, and that an 18-inch bund is allowed to be placed on the top of the raised weir.

(2) A dotted black curve showing the calculated levels under existing conditions.

(3) A full black curve showing the actual levels as obtained from the Irrigation Department records.

For curves (1) and (2), the water-supply of Madras City has been taken at 25 gallons per head per day for a population of 660,000. In curve (3), the quantity is of course that actually used, which is some 35 million cubic feet per month less than that taken for curves (1) and (2). Curve (3) has only been added to show that the calculated quantities agree as closely as could be expected with the actual quantities and that they are sufficiently accurate for a preliminary investigation based on incomplete data such as the present. Below the curves are two sets of three bands respectively red, black and cross hatched, which show for the conditions represented by the curves—

(1) The periods during which the water surface would be below the lowest draw-off (with a 2 feet head) of the scheme now in course of execution, *i.e.*, the periods during which pumping would be necessary.

(2) The periods during which irrigation would be cut off.

The curves show clearly that in 1899—1901, with the proposed alterations, the water surface would not have sunk below the lowest draw-off (with a 2 feet head), but that under existing conditions, it would have done so for 124 days. That is to say, *if the present levels are adhered to, there would have been pumping with all its attendant objections for* 124 *days* even with the much lowered take-off from the tank of the new waterworks. Whereas *with the proposed levels no pumping whatever would have been necessary.*

With the high off-take of the present delivery channel, the duration of pumping would of course be much greater—even with a smaller water-supply to Madras City than that calculated for, the duration of pumping was actually 365 days.

During the period 1904—1906, the pumping would have been necessary for about 93 days with the proposed conditions against 146 days with existing levels. Similarly with irrigation, it will be seen that *in both seasons, there would be less stoppage of irrigation if both the F. T. L. and irrigation levels were raised* 18 *inches*, than would be the case with the existing levels.

The figures from which these curves have been drawn are too numerous to be inserted here. For reference they are included in Appendix No. 4. A summary of the deductions is given in the following table :—

—	Period for which pumping would be necessary with new scheme.	Period during which irrigation would be cut off.
1899—1901.		
Present conditions ...	124 days in 1901 ...	43 days in 1900 and 277 " 1901. 320 days.
If F. T. L. and lowest level of irrigation be both raised by 18 inches.	Nil. ...	29 days in 1900 and 277 " 1901. 306 days.
Reduction obtained by proposed alterations ...	124 days ...	14 days.
1904—1906.		
Present conditions ...	146 days in 1905 ...	255 days in 1905.
If F. T. L. and lowest level of irrigation be both raised by 18 inches ...	93 days in 1905 ...	246 days in 1905.
Reduction obtained by proposed alterations ...	53 days ...	9 days.

Favourable though they are to the proposed alterations, these figures refer to periods when the monsoon failed very badly. During normal years, irrigation and water-supply would benefit considerably more. This has already been explained and is illustrated on Plate No. 10 facing page 30. In the bad years to which the table refers, the water-supply of the Madras City would gain considerable benefit by the proposed raising of the F. T. L. and the lowest level of irrigation while irrigation would also gain but to a smaller extent.

Increased consumption will increase revenue.

36. It may be mentioned here that the revenue derived from the Red Hills undertaking will be increased when the new Waterworks have been completed. Indeed, Madras City may be expected to consume twice as much as at present. This would mean an extra payment to Government by the Corporation of some Rs. 15,000 per annum. It might, therefore, on this ground be reasonably expected that Government should contribute towards the cost of raising F. T. L. The only reason for not urging this point more strongly is that the revenue from the undertaking is only some 1½ per cent. of the capital outlay, and that the Corporation are obtaining water on very favourable terms. It is, therefore, not unreasonable for the Corporation to bear the cost of raising the F. T. L., though it is believed that not only the City Water-supply, but Irrigation also will benefit by so doing.

Importance attached by Government to Madras Water-supply.

37. To continue this important subject: in G. O. No. 310-I., dated 21st March, 1904, Government refer to the *paramount importance of the supply of water to the town of Madras* and again *that the Government always considered the interest of the Madras Water-supply as totally outweighing the claims of irrigation under the Red Hills Tank when the tank became low during the hot weather.*

G. O. No. 925-I., dated 27th September, 1905, re-affirms this view in the following words :—*The Special Chief Engineer considers that, in the*

interests of the supply of water to the town of Madras, the surplus water, if any, at the anicut should be diverted into the Cholavaram and Red Hills Tanks even at the expense of raising the bunds of these tanks or of raising the crest of the anicut. The Government agree with him. . . . .

In view of the principle here enunciated that the water-supply of Madras is the first consideration, and in view of the facts set out above, it is reasonable to believe that if F. T. L. of the Red Hills Tank is raised by $1\frac{1}{2}$ feet at the cost of the Corporation, then Government will be prepared to allow the lowest irrigation level also to be raised.

If this is so, then it would be money well spent to have the work of raising the weir put in hand at once. For, if top water is raised by 18 inches, and a clay bund 18 inches high is allowed on the top of the raised weir as suggested in this report, then the capacity of the tank will be increased by no less than 300 million cubic feet over the capacity of the tank when a bund 18 inches high is placed on the top of the existing weir.

A study of the curves on Plates Nos. 6 and 8 will show that if 1891 to 1910 be taken as a typical period, then this increased capacity will reduce the pumping with the maximum anticipated demand from about once in three years to about once in ten years.

As already pointed out this would be of advantage to the Corporation in the following respects:

(1) It would relieve them of a large portion of the cost of actual pumping, and also of maintaining in an efficient state a pumping plant and establishment always ready to be sent to the Red Hills.

(2) It would diminish the danger to health involved by pumping. The elimination of this danger to the health and lives of the inhabitants of Madras is more important than the economy obtained by saving in cost of pumping and maintaining a pumping plant. For, although, the new filters should insure the elimination of a high percentage of Bacteria, nevertheless, a small number will get through the best filter which has yet been designed, and it is far better to avoid pollution than to depend on its removal by filters.

(3) It would be a valuable safeguard against the existing peril of water famine.

Effect on revenue of increased Water supply to Madras.

38. If, despite the considerations here brought forward, Government are still of opinion that it will suffer loss in revenue through raising by 18 inches both F. T. L. and also the lowest level of irrigation, then the Corporation might guarantee to Government the combined gross revenue from irrigation and the Madras Water-supply equal to the average gross revenue derived from these sources during the past 15 years. This could be done simply by undertaking to pay to Government every year such a sum, as, added to the receipts for that year from irrigation water, would equal the average yearly income for the past 15 years (or other term) from the Corporation and irrigation added together. The following table has been prepared from figures kindly supplied by the Chief Engineer for Irrigation :—

Statement showing the areas charged as irrigated under, and the net revenue derived from the Madras Water-supply and Irrigation Extension for the nine years 1900-01 to 1908-09.

—	Area charged as Irrigated.			Revenue.				Working Expenses.	Net Revenne.
	First crop.	Second crop.	Total.	Irrigation Revenue.	Public Works Department Receipts.		Total.		
					Madras City Water-supply.	Various.			
	ACS.	ACS.	ACS.	RS.	RS.	RS.	RS.	RS.	RS.
1900-01.									
Cholavaram ...	2,916	216	3,132						
Red Hills ...	4,339	1,169	5,508						
Total...	7,255	1,385	8,640	7,918	19,608	245	27,771	2,776	24,995
1901-02.									
Cholavaram ...	3,148	489	3,637						
Red Hills ...	4,283	1,282	5,565						
Total...	7,431	1,771	9,202	9,118	19,765	449	29,332	2,808	26,524
1902-03.									
Cholavaram ...	3,009	998	4,007						
Red Hills ...	4,326	1,994	6,320						
Total...	7,335	2,992	10,327	11,474	23,969	101	35,544	6,484	29,060
1903-04.									
Cholavaram ...	3,718	1,230	4,948						
Red Hills ...	4,310	2,049	6,359						
Total...	8,028	3,279	11,307	12,374	22,225	68	34,667	11,375	23,292
1904-05.									
Cholavaram ...	2,672	354	3,026						
Red Hills ...	4,292	628	4,920						
Total...	6,964	982	7,946	1,895	23,152	55	25,102	10,748	14,354
1905-06.									
Cholavaram ...	3,209	737	3,946						
Red Hills ...	4,362	1,585	5,947						
Total...	7,571	2,322	9,893	10,783	23,817	512	35,112	8,452	26,660
1906-07.									
Cholavaram ...	3,190	1,389	4,579						
Red Hills ...	4,369	2,407	6,676						
Total...	7,559	3,796	11,255	13,655	20,242	557	34,454	6,240	28,214
1907-08.									
Cholavaram ...	3,209	1,062	4,271						
Red Hills ...	4,369	2,107	6,476						
Total...	7,578	3,169	10,747	12,454	21,639	430	34,523	6,840	27,683
1908-09.									
Cholavaram ...	3,317	1,252	4,569						
Red Hills ...	4,388	2,211	6,599						
Total...	7,705	3,463	11,168	13,521	22,195	64	35,780	10,835	24,945
Totals for 9 years.	67,426	23,159	90,485	93,192	1,96,612	2,481	2,92,285	66,558	2,25,727
Average per year.	7,492	2,573	10,054	10,355	21,846	276	32,476	7,395	25,081

The figures given for Irrigation revenue are exclusive of Rs. 11,000 which is the revenue due to old irrigation.

The decrease of revenue in 1904-05 was due to the diminution in the area cultivated under 2nd crop and to the grant of remissions amounting to Rs. 6,350 owing to the unfavourable character of the season.

The increase in working expenses in 1908-09 is due to an outlay of Rs. 4,143 having been incurred on the work of strengthening the Red Hills Tank bund.

It will be seen that on an average the gross receipts—including Rs. 11,000 due to old irrigation—amount to about Rs. 43,500 per annum of which the Corporation already pays Rs. 22,000. With the anticipated increase in consumption of water by Madras, the income from the City alone would be some Rs. 37,000 per annum, or only Rs. 6,500 less than the total gross receipts at present from both irrigation and water-supply combined.

There is, therefore, every probability that the additional sum required to bring in a gross revenue equal to the average, would be less than the Corporation would have to pay for the extra water taken for the City if charged at present rates.

Importance of collecting data.

39. One point forcibly brought out by this investigation is the absence of accurate measurements of both issues and receipts of water at Red Hills Lake. To determine the receipts from the water-shed of 140 square miles—estimated to yield more than half the water which reaches the Cholavaram and Red Hills Tanks, it has been necessary to estimate from data obtained elsewhere for run-off from catchment areas. Similarly the issues for irrigation—more than twice the present supply to Madras City—have been estimated from the quantity of water which experience has shown to be required to irrigate similar crops elsewhere.

In a few years a greater demand for the supply of Madras City will reduce the amount of water available for irrigation to less than it has been in the past. It has, therefore, become of great importance that really complete data should be collected for forming a reliable opinion as to whether the existing sources are utilised to the fullest possible extent consistent with economy. The data thus collected will also indicate whether by raising Cholavaram and Red Hills Tank bunds, or raising the crest of the Tamarapakkam Anicut, or by any other means, a greater proportion of the yield from the catchment area can be rendered available for Irrigation and Water-supply.

It is recommended that the Corporation should approach Government with a view to having accurate measurements made of the receipts and issues of the Cholavaram and Red Hills Tanks. It is also recommended that these measurements should be made, as far as possible, with self-recording instruments, so as to eliminate the personal element.

Summary of results of the investigation into available water-supply.

40. The following is a summary of the points brought out by the investigation made in this section into the quantity of water available for the supply of Madras City :—

(1) With a supply of 25 gallons per head per day to Madras City; there will—in many years—be insufficient water to provide fully for the needs of irrigation, and in some years there will be barely sufficient to supply Madras City.

(2) For both Irrigation and Water-supply it is highly desirable to increase the storage capacity of the Cholavaram and Red Hills Tanks, and also to turn more water down the supply channel from Tamarapakkam Anicut to Cholavaram Tank.

(3) It will be a great benefit to the Madras City Water-supply if the lowest level at which water is issued for irrigation from the Red Hills Tank be raised, so as to reduce the periods of pumping or to eliminate them altogether. Eighteen inches is here recommended, but if it can be raised more with safety, so much the better.

(4) The importance of instituting at once accurate measurements of the available yield and of the demands that have to be met for irrigation, in order that actual measurements may replace the estimates which have to be made at present.

Existing Rules for the regulation of water in the Cholavaram and Red Hills Tanks.

41. For the sake of reference the following copy is given of the Rules for the regulation of water in the Cholavaram and Red Hills Tanks. It is taken from the Appendix to G. O. No. 205-I., dated 21st May, 1908 :—

1. *All available supplies will be admitted into the Red Hills reservoir until water level rises to* +44·67 *or F. T. L.*

2. *When the water in the Red Hills Tank has been raised to* +44·67, *the head sluice in the Cholavaram Tank supplying it will be regulated so as to keep water at that level up to December* 15*th, any surplus being used to fill the Cholavaram Tank to* +59·85. *After December* 15*th water may, if necessary, be allowed to fall to* +43·00 *in the Red Hills Tank, but on this occurring the Cholavaram Tank head sluice must be re-opened.*

3. *Between December* 15*th and April* 30*th following, when the water level in the Red Hills reservoir is* +44·67 *and the water level in the Cholavaram reservoir is* +59·85 *and there is sufficient water in the supply channels for the purpose, the level of the Red Hills reservoir should be raised to* +46·17 *by constructing a turf bund on the low level weir. The level of the Cholavaram reservoir may be raised to* +61·85 *in the same manner, with the approval of the Executive Engineer, Chingleput Division. The turf bunds should be entirely removed on the* 1*st May.*

4. *The head sluices of the Cholavaram and Red Hills Tanks Supply Channels will be regulated to maintain the above levels as long as water is available.*

5. *The total area under irrigation under both tanks will be restricted to—First crop—*7,500 *acres (September to February). Second crop—*3,200 *acres (March to June).*

6. *All supply for irrigation including seed beds under the Red Hills Tank will be cut off when water falls to* +38 *or lower and under the Cholavaram Tank, when water falls to* +46·64 *or lower.*

7. *From the* 1*st July to the* 31*st August no water shall be issued from the Cholavaram or the Red Hills Tanks, except for the Madras Municipal Water-supply.*

8. *If water is below* +40 *on the* 1*st January in the Red Hills Tank, the Collector should be consulted as to the advisability of restricting the area for second crop.* (*See G. O. No.* 310-*I., dated* 21*st March,* 1904, *containing Mr. Davidson's Note about failure of North-east monsoon.*)

9. *The ten-vent surplus sluice will be kept closed as long as water in the Red Hills reservoir is below* +44·67 *from the* 1*st May to the* 15*th December and below* +46·17 *from the* 16*th December to the* 30*th April.*

10. *Should water tend to rise above these levels, the ten-vent surplus sluice will be regulated so as to keep the water at the above levels.*

11. *In the event of a cyclone or stormy weather with heavy rain taking place and the reservoirs being full or nearly full, the head sluice of the Cholavaram Tank Supply Channel should be closed at once, and the ten-vent surplus sluice regulated so as to prevent water rising above* +44·67 *in the Red Hills Tank until danger is past.*

12. *The Executive Engineer, Chingleput Division, being responsible for the safety of the tanks, will be free to regulate the water levels at any time as he may consider desirable to secure their safety.*

To convert the levels given in these rules to the G. T. S. levels used throughout this report, it is necessary to subtract 0·31 ft.

SECTION III.

PUMPING PLANT AND PUMPING STATION.

(DRAWINGS NOS. 1 to 18.)

Pumping Plant:—1. Conditions governing design. 2. Pumping Plant ordered in advance of completion of Distribution Report. 3. Initial cost and cost of Maintenance. 4. Reasons for greater power than was originally contemplated. 5. Capacity of Pumping Plant.

Engines:—6. Type of Engines. 7. Leading Dimensions. 8. Compensating Device.

Main Pumps:—9. Pumps. Action of Pump. 10. Plungers. 11. Pump Valves. 12. Suction Pipes. 13. Delivery Pipes. 14. Air Vessels. 15. Safety Attachment.

Boilers, Economisers, etc.:—16. Boilers. 17. Testing. 18. Automatic Chain Grate Stokers. 19. Superheaters. 20. Economiser.

Meters, Duty and Testing:—21. Venturi Meter. 22. Water-level and Pump-pressure Recorder. 23. Relief Valve. 24. Guaranteed duty of Plant. 25. Testing by Pressure. 26. Engine Tests.

Pumping Station Buildings:—27. Importance of a pleasing appearance. 28. Two designs prepared. 29. Design No. 1. 30. Foundations. 31. Suction Culvert. 32. Chimney. 33. Traveller. 34. Design No. 2 not recommended. 35. Chimney for Design No. 2. 36. Steel Chimney.

Pumping Plant.

1. The design of the Pumping Plant was put in hand as soon as the distributory pipe system had been so far worked out that it was possible to state definitely what pressure should be provided at Kilpauk, and what rate of pumping would be necessary. **Conditions governing design.**

After considering the matter most carefully, the writer concluded that the distributory system should be capable of supplying water to a population of 660,000 at a maximum rate of 75 gallons per day. This high rate of supply is likely to occur only for short periods when there is an exceptional demand, *e.g.*, on the occasion of a popular festival or when a large fire has to be extinguished. The assumed average rate of consumption 25 gallons per head per day is one-third the maximum rate provided for. The reasons for adopting these figures are given fully in Section V.

When the pipe system had been worked out on these assumptions, it was found that to insure an adequate pressure all over the City, the Top Water Level of the elevated tank should be 84 feet above Mean Sea Level. The pumping plant has been designed on the basis of these data.

Pumping Plant ordered in advance of completion of Distribution Report.

2. Owing to a great deal of other pressing work on both the Water and Drainage Works, the writer was not able to devote much time per month to the preparation of the detailed drawings, estimates and report now presented; but, in order not to delay the introduction into Madras of the new Water-supply, it appeared to him desirable to order the pumping machinery as soon as the requirements had been worked out, and without waiting for the completion of this report. Accordingly the remainder of the Distribution work was allowed to lie over, while contract drawings and plans for the proposed pumping plant were prepared, and the work advertised both in India and England.

Seven tenders for the pumping plant were received ranging from Rs. 2,51,500 to Rs. 6,00,840. Upon the recommendation of the Special Engineer, and with consent of Government, the Corporation, on 14th December, 1910, entered into a contract with Messrs. James Simpson & Company, of England, to supply and erect the plant complete for Rs. 3,90,695.

Initial cost and cost of Maintenance.

3. The amount sanctioned by Government in the original scheme for the provision of pumping plant was Rs. 4,00,000. This was for a total of 372 pump horse-power, which would have had to be increased in the course of a few years. The plant now ordered will be of 873 pump horse-power, that is, of $2\frac{1}{3}$ times greater power than the plant for which a provision of Rs. 4,00,000 was made, or put in another way, the Corporation will pay only Rs. 446 per pump horse-power as against Rs. 1,075 per pump horse-power allowed for in the original estimate.

In the cost of maintenance by far the largest item is the cost of coal. The quantity required during the first 10 years or so has been determined as follows. Taking the population to be supplied as 550,000, the quantity of water to be pumped estimated at 25 gallons per head per day—will be $550{,}000 \times 25$
$= 13{,}750{,}000$ gallons per day.

The weight of water will be ... ... $13{,}750{,}000 \times 10$ lbs.

The maximum height to which the water will be raised is 80 feet.

The pump horse-power will therefore be ... $\frac{13{,}750{,}000 \times 10 \times 80}{33{,}000 \times 24 \times 60}$
$= 231{\cdot}5$

And the work to be done in 12 months will be $231{\cdot}5 \times 360 \times 24$
$= 2{,}000{,}000$ horse-power hours.

The guaranteed coal consumption under test is 1·75 per pump horse-power hour. If, for average running conditions, 0·75 lbs. is taken for losses which do not take place during a trial, and if the ample margin of 0·5 lbs. is allowed for lighting and drawing fires, etc., a consumption of 3 lbs. of Indian coal per pump horse-power hour is obtained. Now the number of horse-power hours as determined above is 2,000,000.

Therefore the quantity of coal used per annum is $\frac{2{,}000{,}000 \times 3}{2{,}240}$
$= 2{,}678$ tons per annum.

Assuming this quantity of coal to be used, and a reasonable establishment to be employed, the cost of maintenance is estimated as follows :—

Establishment.				Per Month.	Per Annum.
				RS.	RS.
1	Chief Driver		...	150	
1	Assistant Driver		...	100	
2	Under Drivers	@ Rs. 75	...	150	
3	Firemen	@ ,, 15	...	45	
6	Cleaners	@ ,, 12	...	72	
12	Coolies	@ ,, 8	...	96	
1	Storekeeper		...	25	
2	Watchmen	@ Rs. 7	...	14	
1	Sweeper		...	6	
1	Fitter		...	50	
1	Fitter Cooly		...	15	
1	Blacksmith		...	30	
1	Blacksmith's Assistant		...	15	
				768 × 12 =	9,216

Fuel, Oil, etc.	Per Annum.	
	RS.	
2,678 tons coal @ Rs. 14 ...	37,492	
Oil, etc.	3,000	
Repairs	3,000	
		43,492
Total cost per annum Rs.		52,708

The estimated cost in the original scheme was Rs. 60,000. Thus with the new machinery there is an estimated annual saving of Rs. 7,292 in the cost of maintenance over the original estimate, although the height to which the water has to be raised is more than 50 per cent. greater, and although the price of coal has been taken at Rs. 14 instead of Rs. 12 per ton. Comparing the costs per pump horse-power as originally estimated with that of plant ordered we have—

	Initial Cost.	Annual Maintenance.
	RS.	RS.
Original Estimate	1,075	476
Plant ordered	446	228
Saving	629 = 58 %	248 = 53 %

It is very satisfactory to obtain a first-class, highly finished plant at a cost so much lower than was estimated, and there is little doubt that the Corporation will obtain good value for their outlay

4. There are two reasons why the power of the plant adopted is so much greater than that originally contemplated— **Reasons for greater power than was originally contemplated.**

(1) The capacity of the pumping plant has been increased by 50 per cent. in order that it may not be necessary to add further engines during the life of the plant.

(2) In order to obtain what the Special Engineer has decided to be the lowest acceptable pressure in the distributory pipes, the pumps will have to work against a 50 per cent. greater head than was assumed in preparing the general scheme.

Capacity of Pumping Plant.

5. A detailed description of the engines, pumps and accessories is given in the writer's specification forming part of the contract.

The new plant will comprise three pumping engines, each capable of delivering 12,000 gallons of water per minute against a maximum total head of 80 feet, including suction-lift, delivery-pressure, and friction.

Three boilers are provided, each capable of supplying steam continuously to any two engines working together against the total head of 80 feet.

The machinery will be so arranged, that any two engines can be worked from any two boilers, and that any engine and boiler, or any group of engines and boilers, may be worked together, and also that any engine or boiler may be cleaned or repaired without interfering with the working of the other engines and boilers.

Any two pumps will be capable of working simultaneously and of pumping up into the elevated tank a total of 24,000 gallons of water per minute from the pure Water Reservoirs adjoining the engine-house.

On leaving the pumps the water will be forced through a four-feet diameter main, to the distribution system. The four-feet main will be connected with an elevated balancing tank (fully described in Section IV) which will ens re a steady pressure for the pumps to work against, and will eliminate sudden and undue changes in the quantity of water to be pumped.

Engines.

Type of Engines.

6. The engines will be Horizontal Direct-acting, Compensated, High Duty, Surface-condensing, Worthington Engines, each having two sets of Steam Cylinders and two Double-acting Main Pumps arranged in line with the steam cylinders, and driven direct by prolongations of the piston rods.

The general arrangement of the Engine and Pump work is shewn on Drawing No 17.

Leading Dimensions.

7. The following will be the leading dimensions :—

High-pressure Steam Cylinders,		15 inches	diameter.
Intermediate	do.	23	do.
Low pressure	do.	42	do.
Main Pump Plungers		35	do.

All having a stroke of 30 inches.
Normal speed 30 revolutions per minute.

Compensating Device.

8. To insure smooth, even and economical running, a special mechanical appliance will be fitted to the engines for the purpose of taking up and transferring the excess effort of the initial steam pressure to the latter part of the stroke, when the steam pressure, owing to its expansion, falls below that required to drive the plungers against the water pressure.

The "Compensators" consist of two oscillating hydraulic cylinders, with rams acting on each set of piston rods in such a manner as will alternately resist and assist the effect of the steam.

Main Pumps.

9. The Main Pumps will be Worthington Multiple-valve Pumps, double-acting on both suction and delivery. In each engine the pumps will be duplicate, with the suction and delivery so connected as to allow the water to pass continuously in one stream in an upward direction. **Pumps.**

The four plunger chambers of which the pumpwork mainly consists, will be massive castings, so designed as to prevent the formation of air pockets, and thus obtain the full displacement of water pumped at each stroke.

The relative movements of the two double-acting plungers are so controlled and regulated that the gradual stopping of the one plunger at the end of its stroke occurs at the same time as, and in equal degree to the starting of the other plunger on its forward movement, thereby maintaining a uniform effort on the water column, which results in the desired constant velocity of flow through the pumps. **Action of Pump.**

10. The plungers will be made of extra hard cast-iron, and will work in long sleeves, gun-metal lined. The sleeves will be of ample length to prevent slip, to ensure long life in respect of wear, and to give easy motion of the plungers. **Plungers.**

The plungers will be rigidly and directly connected to the steam pistons; each piston and plunger rod being connected into crossheads between the steam and water ends, in such a manner that either can be disconnected separately and independently, and so permit ready examination of any section of the piston or pump rods without interfering with the other.

11. The main pump valves for each engine will consist of special quality India-rubber discs of small diameter, working on central gun-metal guide-stems screwed into the seats, each valve will have a lift of about $\frac{1}{2}$ inch, and will be controlled by suitable springs bearing on the rubber discs through thin brass plates. **Pump Valves.**

The seats will be of gun-metal, taper-threaded, and screwed firmly into the valve decks of the main pump bodies.

12. Each set of four plunger chambers is connected with a common suction chamber which will be supplied by one vertical straight 45-inch suction pipe, without bends, up which the suction water will flow at a continuous and uniform speed. **Suction Pipes.**

In the suction pipe will be arranged a light non-return foot valve to facilitate charging the pump chambers. The bottom end of the pipe will be bell-mouthed, and covered by a strong steel wire strainer of ample area.

For access to this suction foot valve, in addition to the inspection doors, provision will be made for lowering the suction pipe itself and running it forward on rails until entirely clear of the pump. Either the foot valve or the entire

suction pipe will thus be capable of easy removal until it can be commanded by a straight lift from the Traveller. With this exception, every part of the machinery is under the direct command of the Traveller.

Delivery Pipes.

13. The water is discharged from each delivery chamber through one single delivery pipe, along which the flow will be constant and uniform. Each delivery pipe will be provided with a multiple non-return valve, and a full-way double gun-metal faced valve, the latter controlled through gearing by a hand-wheel arranged conveniently for working from the engine-house floor.

The disposition of the valves will be such that any one pump may be isolated from the discharge main for inspection and overhaul, without interfering with the other engines.

The delivery system, pipes and air vessels are so arranged as to secure uniformity of flow with any combination of engines at work, and to ensure quiet working of the pump valves and avoid all shock in the pipe line.

The delivery from all the engines will unite in one 48-inch steel delivery main, as shewn on Drawing No. 17.

Air vessels.

14. Each pump will be provided with separate air vessels of ample capacity.

Air vessels will also be arranged in suitable positions on the delivery system of pipes, as shewn on drawing. These will be fitted with gauge glasses, and the necessary provision for the attachment of air-charging and blow-off pipes.

Safety Attachment.

15. An Automatic Safety Attachment will be provided and fixed on the delivery of each Main Pump, which will stop the engines and instantly warn the attendant should anything happen to the delivery main, either by bursting of a pipe, or being suddenly closed by the accidental shutting of a valve

This attachment consists of a small plunger in direct communication with the water pressure, set so as to act against a long spiral spring which may be adjusted by means of a screw and hand-wheel for any required pressure The plunger and spring move backwards and forwards as the resistance due to the water pressure on the plunger fluctuates, the movement being shewn by a pointer and index. This constant movement serves to keep the apparatus in working order, and the pointer and index show the actual water pressure and its smallest variation during the working of the pumps.

In case the pressure in the main rises above or falls below certain pre-determined limits, the movement of the plunger against the spring, or *vice versa*, trips a water-locked valve on the condenser, which opens to the atmosphere, and at once destroys the vacuum, instantly rendering the engine incapable of making a full stroke and thus quickly bringing it to a standstill.

Boilers, Economisers, etc.

Boilers.

16. The boilers will be three in number of the well-known Babcock and Wilcox type fitted with the latest improvements. The total heating surface of each boiler will be 1,426 square feet, and the total grate area 36 square feet. The working steam pressure will be 160 lbs. per square inch.

Each boiler will be composed of 7 sections, and each section will be made up of 9 best quality seamless steel tubes, 4 inches in diameter, and 18 feet long, connected at the ends by continuous wrought mild steel staggered headers, or "up takes" and "down takes," the tubes being expanded therein.

The steam-and-water drum of each boiler will be 42 inches in diameter and 22 feet 9 inches long, made of mild steel plates $\frac{7}{16}$ inch thick, with the longitudinal seams double riveted, and each drum will be provided with a manhole at one end.

The boiler fittings will all be in accordance with the requirements of the Inspector of Steam Boilers for Madras. Each boiler will be provided with one double spring safety valve set to blow off at 160 lbs. per square inch.

One main steam stop valve, 4 inches diameter, cast steel body, outside screwed, with wrought steel pillars and crossbar.

One steam pressure gauge, dial 12 inches in diameter.

Two sets of large sized water gauges, asbestos packed, provided with automatic closing valve and protectors.

One combined stop and check valve, 2 inches diameter, and one stop valve, 2 inches diameter, gun-metal throughout, for feed

One blow-off cock, 2 inches diameter.

One stop valve and one cock, each ¾ inch diameter, for cleaning pipe connections.

The furnace will be specially constructed for burning Indian Coal.

Testing.

17. The sections and mud drum will be tested and made tight at the manufacturer's works under an hydraulic pressure of 400 lbs. per square inch, and the steam-and-water drum under an hydraulic pressure of 260 lbs. per square inch.

Automatic Chain Grate Stokers.

18. Each of the three boilers will be supplied with a chain grate stoker having an area of 36 square feet.

The grate will consist of an endless chain of short cast-iron grate bars, linked together, running on rollers, and driven by a drum at the front end.

The movement of the chain grate will be continuous, and the speed capable of being varied from 6¼ to 25 feet per hour.

The hopper will be so arranged that the fuel will be spread over the whole width of the grate, the thickness of the fire can be regulated by a vertical movement of the fire door.

The starting and stopping of the automatic stoker, or the variation of speed, will be effected by a sliding gear similar to that of an ordinary motor car.

A spring friction safety clutch will be provided for preventing damage in the event of the stoker becoming jammed.

The entire stoker will be mounted on wheels, running on rails placed at the sides of the ash pit, so that it can be drawn out from under the boiler.

The stoker will be driven by means of a chain and sprocket wheels. It is estimated that the power required will be about 3 B. H. P. per boiler.

The usual length of chain grate stokers for the boilers above described is 8 feet 6 inches, but in view of the comparatively poor quality of coal used in

Madras, the makers have agreed to lengthen the chain grates a d make them 10 feet. This should ensure that best results are obtained.

Super-heaters.

19. Three Babcock and Wilcox Patent Steam Superheaters will be provided, each of 248 square feet of heating surface. This will give the steam a superheat of 150 degrees Fahrenheit under normal working.

Each superheater will consist of 26 weldless steel tubes, 1½ inch. in diameter, bent into U shape, and connected at both ends by expanded joints to wrought steel boxes ; one of these boxes receives saturated steam from the steam-and-water drum ; the other delivers superheated steam to the engine steam pipes.

Each superheater will be made tight and tested at the manufacturer's works under an hydraulic pressure of 260 lbs. per square inch.

Economiser.

20. One Pimbley's Fuel Economiser will be provided. The economiser will be fitted with self-acting scrapers driven by a steam engine.

Meters, Duty and Testing.

Venturi Meter.

21. A Venturi Meter will be inserted on the 48-inch pumping-main. It will consist of one 48-inch Venturi Meter tube, as shewn on Drawing No. 20. The Meter tube will have a throat ratio of 1 to 6, with Spigot ends, and will be arranged for a maximum registration of 1,800,000 and a minimum registration of 120,000 gallons per hour. A combined Recorder will be used to show by diagram the rate of flow at any moment, and by counter the total quantity passed. The upper portion of this instrument will be enclosed in a glazed teakwood case, and the bottom portion in polished teakwood panels. The Recorder will be connected to the Meter tube by means of 1-inch galvanised wrought-iron piping. Arrangements will be provided to flush out the connecting tubes.

Water-level and Pump-pressure Recorder.

22. A Water-level and Pump-pressure Recorder, as shewn on Drawing No. 20, will be provided. The upper portion will be enclosed in a polished glazed teakwood case. The apparatus will include all necessary gear,—a powerful weight-driven eight-day clock, copper float, phosphor bronze float cord, 14-inch cast-iron float pipe in two 9 feet lengths, one cast-iron foot casting for Recorder, one 14-inch cast-iron ring adapter, and two years' supply of weekly diagram papers.

This instrument will record continuously the height of the suction lift and the head against which the pumps work. The sum of these two pressures multiplied by the quantity pumped, as recorded by the Venturi Meter, will give the work done.

Relief Valve.

23. A dead-weight loaded relief valve will be fixed on the discharge between the pumps and the elevated tank. It will be capable of being set to relieve the main at any pressure between zero and 75 lbs. per square inch, and will be fitted with all the necessary drain pipes to convey the water back to the pump sump. A relief valve is required for two reasons, because (1) when water is first pumped into the old pipes, it is essential that the pressure should never exceed what is safe for the mains ; (2) that should necessity arise, direct pumping into the mains may be adopted. In this case, the pressure allowed will be determined by setting the relief valve as required.

24. The following duties are guaranteed for the plant :— **Guaranteed duty of Plant.**

Steam Consumption—

$12\frac{1}{2}$ lbs. per pump horse-power at full load.

$13\frac{1}{4}$,, ,, ,, at half load.

Coal Consumption—

1·75 lbs. per pump horse-power hour using coal having a calorific value of 12,785 British Thermal Units per pound.

The steam consumption is guaranteed under a penalty of Rs. 1,000 for every half pound of steam consumed in excess of the guarantee.

25. After erection has been completed, and before the final painting, the whole construction will be tested under hydraulic pressure. A force pump will be connected to the discharge pipe, and a pressure of 50 pounds per square inch applied in such manner as to test the pumps, pump valves, foot valves, sluice valves, air vessels, discharge pipes, pump rods and the frames of the engines. After this test the engine will be run to full capacity, discharging through the pressure relief valves for the purposes of testing them. A further test will be made by suddenly opening the valve on the pump main, in order to test the speed controlling device. **Testing by Pressure**

26. Each engine will be run continuously for 24 hours, is to ascertain whether it does the work specified. Combinations of engines and boilers will also be tested to ascertain whether they can be run in combination as specified. **Engine Tests.**

The quantity of water pumped will be determined by means of the Venturi Meter which is to be fixed on the pump delivery, after the apparatus has been properly adjusted, and this will be checked by direct pumping into the elevated tank.

The head against which any pump works will be determined by means of pressure gauges on the delivery, and to the head thus obtained, will be added the average depth of the surface of the water in the pump well below the pressure gauge, no allowance will be made for any head consumed in entering or passing through the strainer, foot valve, suction pipes and pump.

Pumping Station Buildings.

27. In designing the Pumping Station buildings, an endeavour has been made to give them a pleasing appearance and much attention has been paid to a suitable style of architecture. There is no doubt that environment is important, and in England, Private Water Companies, whose primary object is to make money, recognise the importance of good buildings. If the Pumping Station is suitably designed, and if it is in keeping with the machinery it has to house, if it is well ventilated, well lighted, cool, and inspiring both inside and out, then it is likely that the drivers will take a pride in looking after the machinery and in maintaining it clean, polished, and well oiled, perfectly adjusted, and in the best possible condition. The working costs will be reduced and the life of the plant will be increased. **Importance of a pleasing appearance.**

On the other hand if the building is mean in appearance, hot, badly lighted, or ill-ventilated, the machinery is sure to suffer. The drivers will take

no pride in keeping it up to the highest pitch of perfection, parts of the engines will be allowed to get rusty and dirty, small faults will not be remedied immediately, and in consequence the cost of upkeep will be high and the life of the plant will be short. In this way it is a real economy to provide a station worthy of the machinery it is to house.

Another reason why a good class building should be erected is that, except for the Pumping Station and possibly the elevated tank, there is nothing of a monumental nature about the Waterworks, most of the work being underground. It is desirable that there should be something to commemorate the important work that the Corporation are now carrying out; for the introduction into the city for the first time of a filtered water-supply under adequate pressure is a notable step towards improving the healthiness of the city, and bringing Madras into line with Bombay, Calcutta and other important Indian cities. A handsome and well designed Pumping Station would form a suitable and at the same time an inextravagant memorial of the work.

Two designs prepared.

28. In preparing the drawing of the station, the points mentioned in the last paragraph have been borne in mind. The close proximity to the building of the very large tank is an awkward factor in determining the architecture—for the natural best front of the building is obscured by the big elevated tank—and the main entrance has therefore been made on the south side. Two designs have been prepared. One of these called Design No. 1 is intended to look well and to be worthy of the high class machinery which has been ordered. This is the design recommended. Another Design No. 2 has been worked out for an inexpensive building. It has the merit of costing less money than the former design, but it is not recommended.

Design No. 1.

29. The general dimensions of the building have been settled in consultation with the makers of the machinery. The pumping plant requires a building about 95 feet long, 85 feet wide. In both designs this building is divided into an engine-house and boiler-house separated by a division wall. The height proposed—about 40 feet—will not involve a great deal of useless structure, and at the same time the Pumping Station will not be entirely dwarfed by the tall chimney and the elevated tank which are in close proximity to the Pumping Station. Plans, Elevations and Sections of the building proposed are shown on Drawings Nos. 3 and 18. The general appearance of the proposed Pumping Station and Tank is best shown by the perspective view shown on the frontispiece and on Drawing No. 1. The spectator is supposed to be standing about 200 feet away and a little to the right of the centre of the elevated tank with his eyes about 5 feet above ground level. Thus the tank appears larger in proportion to the Pumping Station than it would from most other points of view.

While the design is original, it has been prepared so that the exterior may in a general way harmonise with other important Madras buildings. To illustrate this general harmony, each corner of the frontispiece and of Drawing No. 1 has a small inset sketch of an important building conforming to the style of architecture which has established itself in Madras for such buildings. The building proposed would be built of first-class machine-made red bricks,

unplastered and neatly pointed. A certain amount of granite stone is proposed to relieve the large areas of brickwork, but for the sake of economy stonework is reduced to a minimum.

The keystones of all arches will be Sholinghur granite. The upper horizontals of the building and its towers are accentuated by Cuddapah slab, or light reinforced concrete, eaves courses supported on granite corbels. At each corner of the building is a brick tower surmounted by a high dome cement plastered. Verandahs are provided ; that along the front face is intended to be somewhat handsome. Along the three other sides, the verandah roofs are of thin reinforced concrete supported on granite corbels. They will give shade and add to the appearance of the building.

The walls of the building are pierced by three tiers of openings. The lower openings will consist almost entirely of wide venetianed doors. Above the doors will be a tier of glass windows, and the highest tier of openings will have venetian shutters. The flat roof is designed to be in two main sections; one over the boiler-house, and the other over the engine-house. It will be constructed of Siegwart beams, covered with 2 inches of fine cement concrete, on the top of which will be laid a layer of malthoid or other waterproof material. The Siegwart beams, will be supported on steel box girders spaced 9 feet 6 inches centre to centre. For details of roof see Drawing No. 9.

The weight upon the foundations under the towers will not excced $1\frac{1}{2}$ tons per square foot, and under the walls the pressure will be less.

The chief materials to be used in the building are concrete in combination * mortar for foundations, concrete in cement for engine floor foundations and engine beds, pressed or best stock bricks in lime-surki mortar for the walls and towers. The wood-work will be teak throughout, painted green on the outside and varnished inside the building.

The engine-house and boiler-house floors are for the most part to be of tiles either encaustic, or of special cement. The latter are now being made by the Special Works Department for some of the sewage pumping stations, and if they prove a success, it is proposed to use them at Kilpauk. They will be laid on concrete, which, in the case of most of the engine-house, will take the form of light reinforced slabs supported by steel beams. Hayward's light will be inserted in the floor in order to give light to the machinery fixed below floor level.

The towers at the four corners should give distinction to the building, they will prevent the Pumping Station being dwarfed by the elevated tank, and they are a feature which arises naturally from the arrangement of the pumping plant. The large overhead pump delivery 4 feet in diameter which turns down vertically at the east of the Pumping Station would look unsightly if it were outside the building. The most convenient way of enclosing it is by means of a tower. To match this tower, towers are placed at the other three corners. The interior of these towers will form useful places for offices, stores, and fitters' shop.

* The "Combination mortar" proposed will be composed of the following proportions by volume, Portland cement 1 part, lime 1 part, surki $1\frac{1}{2}$ parts, sand 6 parts. These proportions were arrived at as the result of numerous tests made by the Special Engineer. The mortar is quick setting and is almost as strong as a 1 to 3 cement mortar. It is considerably cheaper than such a mortar, and has been used with great success on both the Water and the Drainage Works now in course of execution.

Foundations. 30. The foundation designs have been prepared to suit the engines ordered and the building shown in Design No. 1. The building and engine foundations are shown in detail in Drawings Nos. 4, 5 and 6. It will be noticed that there is a slight discrepancy between the foundation drawings and the building drawings. . This is because the building drawings were prepared before the foundation details had been finally settled in conjunction with the makers. When the foundation plans had been completed, it was found that the piers had to be re-arranged, to allow of holes being formed in the division wall between the engine and boiler houses, so as to admit of the removal of the side rods of the engines. Further, it was intended originally to support the traveller and roof trusses upon steel stanchions built into the piers. This has subsequently been modified and it has been decided to carry both the traveller and roof on the masonry piers. It did not seem worth while to delay the presentation of the Report in order to prepare new drawings which would show accurately the slight alterations required.

Suction Culvert. 31. The suction culvert has, for the sake of economy, been kept small, but it is believed to be of ample sectional area to allow the free passage of water to the furthest pump whatever the level in the clear water tank may be. It is proposed that the foundations of the building, engine-house and suction culverts should be constructed departmentally. This is especially desirable in the case of the suction culvert, because very careful timbering will be necessary in order to prevent the ground on each side being disturbed, for if the ground were disturbed, considerable expense would be involved by the heavier reinforced concrete floor which would be required to cover the disturbed portions.

Chimney. 32. A quare, panelled chimney has been designed to harmonise with the buildings shown in Design No. 1. The limits of stress taken are the same as those adopted for the elevated tank (see Section IV), where the reasons for adopting them are given. For brickwork, the limiting stress is $3\frac{1}{2}$ tons per square foot, for earth foundations, it is $1\frac{3}{4}$ tons per square foot. The height of the chimney has been fixed at 150 feet to ensure a good draft with Indian coal.

It was first intended to have a chimney 120 feet high, but Messrs. Babcock and Wilcox, whose boilers are to be installed, strongly recommend that the chimney should be 150 feet high, because from their recent experience of other plants in the Madras district, they have come to the conclusion that a much higher chimney than usual is required in order to ensure best results, owing partly to the humidity of atmosphere and also the poor quality of coal. It is certainly on the safe side to have a sufficiently high chimney, especially when an economiser is installed as in the present case, for a certain amount of draught head is consumed in driving the hot furnace gases through the economiser, and further the temperature of the gases is decreased, so that the pressure due to the difference in weight between the hot gas and the outside air is reduced.

Traveller. 33. A traveller governing the whole of the engine-house has been designed to be carried on joists supported by masonry piers. It will be of sufficient power to lift any part of the machinery. Elevations of the traveller and the method of supporting it are shown on Drawing No 10.

34. A general design—called Design No. 2—has been prepared for a cheaper Pumping Station and is shown on Drawing No. 18. This is a perfectly plain building intended to be constructed of country bricks in lime-surki mortar, the whole being plastered inside and out with lime mortar. The estimate provides for a corrugated iron roof as being the cheapest and lightest. This design is not recommended. For reasons already given, the writer advises a better class building, such as Design No. 1. If, however, cost is the only consideration, then Design No. 2 may be adopted. **Design No. 2 not recommended.**

Separate foundation drawings have not been prepared for the buildings shown in Design No. 2. They are estimated to cost the same amount as the foundations proposed for Design No. 1. The engine foundations and suction culvert would be as before. If this Design (No. 2) were adopted, the masonry piers for the elevated tank would be plastered so as to harmonise with the Pumping Station. If Design No. 1 is adopted, these piers would be built of machine-made red pressed bricks, not plastered, but neatly pointed.

35. A plain circular chimney is shown on Drawing No. 18. It is intended to be used in case Pumping Station Design No. 2 is adopted. The circular chimney would be somewhat cheaper than the square panelled chimney for Design No. 1. Its height would be the same, 150 feet, and its sectional area is practically the same. **Chimney for Design No. 2.**

36. The cost of a steel chimney was worked out to ascertain if it would be cheaper than a brick chimney. The chimney estimated for is of a self-supporting type. This type is rather more expensive than a chimney furnished with stays, but it is more graceful in appearance, and furthermore it is devoid of the stays which would be inconvenient and awkward at the Kilpauk Pumping Station. **Steel Chimney.**

The design of the chimney is shown on Drawing No. 13. It is 150 feet high above the ground level. At the base it is 14 feet in diameter and diminishes in a height of 20 feet to 6 feet in diameter, which diameter is continued up to the top.

The calculations have been made on the assumption of a wind pressure of 50 lbs. per square foot. There are 8 foundation bolts each $2\frac{1}{2}$ inches in diameter and 18-foot long which are anchored into a massive concrete base, 25 feet square, by means of heavy cast-iron holding-down plates. The steel would be mild having a tensile strength of 28 to 32 tons per square inch within elongation of 20 per cent. in a length of 8 inches. The thicknesses of the plates beginning from the top would be—

60 feet	$\frac{1}{4}$-inch plates.
40 ,, ...	$\frac{5}{16}$,,
25 ,, ...	$\frac{7}{16}$,,
25 ,, ...	$\frac{1}{2}$,,
150 feet	

The top of the chimney would be finished off with an ornamental cast-iron cap. A wrought-iron ladder is allowed for; this would be of the cage

safety type extending up to the top of the chimney. Pulleys would be fixed round the chimney top for attaching slings for painting, &c. The estimated cost is—

			RS.
For steel chimney erected complete	...	...	10,200
For ornamental cap	... ...	...	750
For masonry foundation	... ...	...	8,000
			18,950
Supervision and contingencies at 15 pet cent.		...	2,850
			21,800

This compares with a total of Rs. 19,500 for the square brick chimney and Rs. 13,200 for the circular brick chimney. In these circumstances, the steel chimney is not recommended, for it would be slightly more expensive in first cost, while it would not be so handsome, and in upkeep it would be more costly on account of the frequent painting that would be necessary.

SECTION IV.

ELEVATED TANK.

(DRAWINGS NOS. 21, 22 AND 23.)

General:—1 Why an elevated tank is required. 2. Previous proposals. 3. Altered conditions render tank supported on sand unsuitable. 4. Elevated tank now proposed. 5. Evolution of present design.

Tank Supports:—6. Load on foundations. 7. Load on brickwork. 8. Load on concrete. 9. Load on piers of combined brickwork and concrete.

Steel Tank:—10. Thickness of plates. 11. Joints of tank plates. 12. Spherical-bottomed tank considered but not proposed. 13. Inlet and outlet and wash-out pipes. 14. Overflow pipes. 15. Expansion joints. 16. Method of executing work.

Detailed description of Steel Tank and Steel Supports:—17. Tank plates. 18. Riveted joints. 19. Roof. 20. Ventilator in roof. 21. Stanchions and beams. 22. Inlet-outlet pipes. 23. Overflow pipes. 24. Wash-out pipes. 25. Expansion joints 26. Tie rods. 27. Access stairway and entrance. 28. Roof water and down pipes.

Proposed Specification of Materials and Workmanship for Steel Tank and Steel Supports:— 29. Workmanship. 30. Quality of material. 31. Plates. 32. Erection in shops. 33. Erection at site. 34. Rivets and Rivet-holes. 35. Riveting. 36. Caulking. 37. Painting. 38. Testing. 39. Contractor responsible for water-tightness and safety.

Proposed Specification for Alternative Designs:—40. Conditions which alternative designs must fulfil. 41. Loads. 42. Unit stresses.

Summary of Quantities, Loads, etc.:—43. Weight of steel work. 44. Weight of masonry. 45. Weight of water. 46. Loads.

General.

Why an elevated tank is required.

1. An elevated tank is required to maintain a balance between the demand and supply of water to the distributory system.

The demand is constantly changing throughout day, and it also changes from one day to another. To meet this fluctuating demand by direct pumping into the mains would be impossible, unless a large number of pumping

engines were employed. Even so it would be very difficult to follow sufficiently closely the ever varying demand. Furthermore, the large number of pump units would be expensive both in initial cost and in annual upkeep, because both these items of expenditure are greater per horse-power for small units than for large units. For these reasons it is not satisfactory to endeavour to meet all the fluctuations in demand by varying the rate of pumping. A better way is to construct a reservoir at such a height as will ensure an adequate pressure all over the city and of a capacity sufficiently large to meet small fluctuations in demand. When the quantity of water pumped is greater than the consumption, the reservoir will store the excess. It will in turn supply the water thus stored to the distributory system when the consumption is greater than the quantity pumped.

To fulfil its functions, it is essential that the reservoir should be some height above the general level of the area supplied, and where possible such reservoirs are constructed on convenient eminences. Unfortunately there is no high ground in Madras. It is, therefore, necessary to provide a reservoir supported some height above the level of the ground—in other words an elevated tank.

Previous proposals.

2. In the original scheme, as described *in G. O. No.* 635-*M.*, *dated* 2*nd April*, 1906, two reservoirs were proposed ; one a low level reservoir for which a part of the Open Channel was to be utilised, and the other a small elevated tank. This proposal was criticised adversely by both the Sanitary Commissioner and the Sanitary Board ; and the Chief Engineer to Government in his Note, as given *in G. O. No.* 609-*M.*, *dated* 22*nd March*, 1907, agreed with their criticisms and recommended that the proposed low level reservoir should be abandoned and that the elevated tank should be enlarged. We went on to recommend that the tank should rest on sand contained by a circular wall and floor.

Altered conditions render tank supported on sand unsuitable.

3. As a result of the present investigation into the best method of improving the Distribution System, it is recommended that, in order to obtain an adequate supply at a fair pressure all over the City, the levels of the tank should be as shown on Plate 4 where the bottom of the tank is given as 76 feet above a datum 20 feet below Mean Sea Level and Top Water as 104 feet above the same datum. The tank as thus designed is 22 feet higher than was contemplated by the Chief Engineer when he made his proposal to support the tank on sand kept in place by a retaining wall. In the altered circumstances, a retaining wall—if used as proposed—would have to be such a massive structure, and the area of the foundations to ensure that there should be no settlement would be so considerable, that no economy would be obtained by using this method. On the other hand, the possibility of movement of the tank due to compression or escape of the sand would be considerable, and such movement would probably result in fracture of the pumping main, connecting pipes, or of the tank itself. Any of these accidents would be likely to cause total collapse of the structure and stoppage of the water-supply of the City.

4. The tank now recommended is of the same capacity and overall dimensions as were proposed by the Chief Engineer to Government in the Note above referred to. The position of the tank is shown on Drawing No. 26. **Elevated tank now proposed.**

The general design and details are given on Drawings Nos. 21, 22 and 23. A reference to these will show that the tank in plan is a circle 104 feet in diameter, and that it is 28 feet deep from overflow level to the flat bottom, with a capacity of 1½ million gallons. The bottom of the tank is 37 feet and the top of roof 73 feet above ground level. It is to be built of steel throughout and to be covered by a steel roof, the top of which extends 6 feet 6 inches above overflow level and is itself surmounted by a central ventilator protected with wire gauze to keep out birds.

The tank is strictly speaking designed to be a balancing tank—to store water when the quantity pumped is in excess of the demand, and to supply water when the consumption is greater than the water pumped. In this way only the excess or deficiency pumped enters or leaves the tank as the case may be. A small proportion only passes through the tank, and if the quantity pumped were exactly equal to the demand for the City, no water would either enter or leave the tank.

One pipe is therefore sufficient to serve both as inlet and outlet. It will take the form of a 36-inch diameter branch from the 48-inch pumping main.

An overflow delivering into the pump suction well, and a wash-out for emptying the tank are also provided.

The tank is supported partly by arches springing from masonry piers and partly by steel stanchions. The arches and piers form the external support of the tank. They will give the structure lateral stability and will also add greatly to its appearance.

5. The first design prepared by the writer was for a steel tank resting on a concrete floor, itself supported by masonry columns. The object of this design was to reduce to a minimum the metal that would require painting, and to ensure that such metal should be in an accessible and easily inspected position, so that there would be no excuse for allowing it to be neglected. It was found, however, that to limit the pressure on the foundations to 1½ tons per square foot—the reasons for adopting this figure are given below—the dimensions of the tank would have to be altered, so that for the same capacity it would have a diameter of about 170 feet with the foundations some 200 feet in diameter. **Evolution of present design.**

Such a foundation would involve a large and costly mass of masonry, and it was decided to work out a design using steel stanchions embedded in concrete for the central supports, while still retaining the masonry piers and arches for the outer ring. This is embodied in the design now submitted.

In determining the dimensions of the steel stanchions, no allowance has been made for the support derived from the concrete casing and a slight economy over the design submitted might be effected by using 9-inch by 3-inch

channels fixed $5\frac{1}{2}$ inches apart instead of 10-inch by $3\frac{1}{2}$-inch channels fixed $4\frac{1}{2}$ inches apart. This alteration would reduce the weight of the stanchions per lineal foot from $90\frac{1}{2}$ lbs. to 82 lbs.

A further difficulty in the original design was the riveting up of the steel plates which were to rest on the concrete floor. It would be impracticable to support free of masonry so large an area as the steel floor plates, and probably the simplest solution, if this design were adhered to, would be to rivet angle irons along the edges of the plates. Such a method, however, would entail a large number of rivets, and it would be difficult to ensure the angles being sufficiently straight and true for easy and rapid erection. Furthermore, it would be almost impossible to remove and replace the rivets connecting the angle irons to the plates, should any of the rivets prove leaky or faulty when the tank is tested as a whole.

It was therefore decided to rest the steel floor of the tank upon steel beams, themselves supprted by the piers and arches already described. The floor beams have been so arranged as to allow of riveting the floor plates conveniently.

Following the principle—already enunciated—of leaving exposed as little metal work as possible, the floor beams themselves will be encased in concrete. The upper surfaces of these casings will constitute the actual supporting floor of the tank, in the form of long flat tablings separated by channels. The floor plates of the tank are arranged in such a manner that their longitudinal joints will come over the centres of the concrete channels, and can therefore be riveted up with ease. Smaller channels will have to be left temporarily in the concrete tablings under the cross joints also, but as soon as the tank has been tested and found satisfactory, these can be grouted up solid. The only portions of the underside of the tank left permanently exposed will be strips including the longitudinal joints. These strips can be readily examined and painted from timber platforms laid on the concrete jack arches between the columns.

Tank Supports.

Load on foundations.

6. The surface soil is a clay which would not form a satisfactory shallow foundation, as it would be liable to contract and crack during dry weather and to swell during the wet season. At a depth of eight feet, however, there is a sandy loam on which the tank may be safely founded. The load on the foundations has been restricted to $1\frac{1}{2}$ tons per square foot.

This figure may appear low for the limiting load, but in a structure, so important as the elevated tank, the foundations must not be loaded above a pressure that is absolutely safe. The adoption of so small a stress is in accordance with the recommendations of the Chief Engineer to Government, as given in Memorandum No. 3548C., 11th August, 1898.

Load on Brickwork.

7. The following tables give results of tests made at the Madras Engineering College on bricks manufactured by Mr. Pattabhirama Rao for the

construction of the New Municipal Buildings now being erected in the People's Park:—

Designation of Sample.	Load at which first crack appeared.		Maximum Load.	
	Total tons.	Stress tons per sq. ft.	Total tons.	Stress tons per sq. ft.
Hand-moulded stock bricks. 9·28 ins. × 4·18 ins. × 2·60 ins.				
A ...	9·51	36·9	29·85	115·8
B ...	21·35	80·6	27·55	104·0
C ...	5·04	19·5	30·39	117·4
D ...	5·18	18·4	32·68	116·3
E ...	9·87	37·0	24·97	93·5
F ...	10·32	39·3	29·11	110·7
Average ...	**10·21**	**38·6**	**29·09**	**109·6**
Machine-pressed bricks. 8·95 ins. × 4·23 ins. × 2·88 ins.				
A ...	9·25	34·2	18·26	67·6
B ...	8·12	28·7	20·88	73·8
C ...	4·36	16·8	24·08	92·6
D ...	10·18	39·6	29·34	114·2
E ...	6·45	24·1	18·48	69·2
F ...	10·27	42·4	44·44	183·6
Average ...	**8·10**	**30·9**	**25·91**	**100·1**

These strengths refer to bricks tested separately, they are much less than usually obtained by testing good class English bricks. Now the resistance per square foot of high piers to crushing is much less than that of the individual bricks tested separately. Furthermore, a factor of safety of at least 4 should be allowed for the piers of so important a structure, such as this tank. Bearing these points in mind, and after very carefully considering the matter, the load on brickwork in special mortar has been limited to 3½ tons per square foot.

The "special" mortar here referred to will consist of the following proportions by volume 1 part cement, 1 part lime, 1½ parts of surki and 5 parts sand. Experiments, made in connection with the construction of the Red Hills conduit, have shewn that this mortar is as strong as a mortar of 1 part cement to 3 parts sand, and it is considerably cheaper than such a cement mortar.

Since the manuscript of this Report was written, Mr. W. H. James, Principal of the Madras College of Engineering, has been good enough to let the writer see a proof of a Professional Paper that he has written on "Strength and Elastic Properties of Brick Masonry." As the result of numerous experiments

on piers, he concludes, that with a factor of safety of 8, and "under conditions similar to those of the tests, the load put on cement mortar masonry built of stock bricks should not exceed 5 tons per square foot." He also says: "In some cases it might be advisable to adopt a higher figure (for the factor of safety) say from 10 to 12." If 12 were adopted then the greatest stress allowable as deduced by Mr. James, from his experiments, would be $3\frac{1}{3}$ tons per square foot, which is a very close approximation to the $3\frac{1}{2}$ tons per square foot which has been fixed on for the tank.

The reason for taking the apparently high factor of safety of 8 is that all the columns tested by Mr. James showed signs of failure long before the maximum load was reached, and sometimes before half that load. Therefore, taking the usual factor of safety of 4 for workmanship, etc., we get a factor of 8 referred to crushing loads.

With a factor of 8 under conditions similar to those of his tests, Mr. James fixes the following limiting loads:—

Stock bricks in cement mortar, 5 tons per square foot
" " surki mortar, 4 tons " "
" " lime mortar, 3 tons " "
Country bricks in lime mortar, $1\frac{1}{4}$ tons " "

Considering that the piers on which Mr. James experimented were only about 34 inches high; and that with columns having a greater length in proportion to cross sectional area—as in the case of this tank—the strengths would be rather less; it is seen that the conclusions arrived at by Mr. James are a strong confirmation of the accuracy of the figures determined on by the writer.

Load on concrete.

8. Clean unweathered Pallavaram stone, such as is easily obtainable, when mixed with Portland Cement mortar makes a very strong concrete. The strength of this material is well known, and a limiting stress of 7 tons per square foot, as adopted in this design, may be allowed without risk of failure.

Load on piers of combined brickwork and concrete.

9. In these piers, the brickwork and concrete will be reinforced by means of horizontal iron bonding ties or expanded metal bonding sheets; with the extra strength thus obtained a load of 5 tons per square foot has been fixed as the limiting stress. In this connection it should be borne in mind that concrete columns and brick piers built in good mortar and loaded to destruction always fail by splitting and bulging outwards, and not by direct crushing, thus showing that the bonding is the weakest feature of such structures. This is further proved by the well-known researches of Considere, who showed that by means of hoops or spirals the compressive strength of concrete columns is greatly increased, the increase depending upon the nature of the materials used; for example it is much more noticeable when a small percentage of Portland Cement is used than when a large percentage is employed. Great care will therefore be taken to ensure that the bond shall be as perfect as possible, and also that all joints are thoroughly filled with mortar.

Steel Tank.

Thickness of plates.

10. As stated hereafter the "British Standard Specification for Structural Steel for Ship-building" will have to be complied with by the material used for the Tank. According to this specification, which is generally used for steel

tank-work—the tensile breaking strength of the steel plates shall be between 28 and 32 tons per square inch.

Taking the lower figure and assuming a factor of safety of 4, we get as the greatest allowable stress 7 tons, or 15,680 lbs. per square inch, or say 15,000 lbs. per square inch.

If an efficiency of 60 per cent. is allowed for the double riveted vertical joints, then in order that the stress may not exceed 15,000 lbs. per square inch at the joints, it will be necessary to limit the stress on the gross area of the plates to $\frac{15{,}000 \times 60}{100} = 9{,}000$ lbs. per square inch.

The pull at any horizontal section in the plates is $5{\cdot}208h \times r$ lbs. per vertical inch, where h is the height of water in feet above the section and r is the radius of the tank in feet.

In this case $r = 52$ feet and the pull becomes $270{\cdot}816h$ lbs. per vertical inch.

If t is the thickness of the plate in inches, then the stress per square inch is $\frac{270{\cdot}816h}{t}$ lbs.

But as it has been decided to limit the stress to 9,000 lbs. per square inch of the gross section area of the plates, we may put $\frac{270{\cdot}816h}{t} = 9{,}000$ or $t = \frac{270{\cdot}816h}{9{,}000} = 0{\cdot}030096h$, say $0{\cdot}0301h$, expresses the thickness of the plates to be adopted.

To the thickness thus obtained $\frac{1}{16}$ inch will be added to allow for corrosion, and thus the thickness in inches becomes

$$t = 0{\cdot}0301h + \frac{1}{16}.$$

With six rows of plates as shown on Drawing No. 22, and assuming the surface of the water to be 9 inches above the overflow lip, we obtain the figures given in the following table :—

No. of Tier.	Value of "h" at bottom of tier.	Thickness of Plates in inches.	
		From formula $t = 0{\cdot}0301h + \frac{1}{16}$.	As adopted.
First (top)	4·75	0·205	0·3125 = 5/16
Second	9·50	0·348	0·375 = $\frac{3}{8}$
Third	14·25	0·491	0·500 = $\frac{1}{2}$
Fourth	18·50	0·620	0·625 = $\frac{5}{8}$
Fifth	23·25	0·763	0·75 = $\frac{3}{4}$
Sixth (lowest)	27·75	0·902	0·937 = 15/16

The plates in the top tier or row are slightly thicker than they need be to comply with the formula. The reason for this is that one-quarter inch is the thinnest metal that should be used for the tank plates to insure that they shall withstand wind pressure, and by adding, as in other cases, $\frac{1}{16}$ inch for corrosion, we get the adopted thickness of $\frac{5}{16}$ inch. It may be pointed out here that an angle iron stiffener is provided at the top of the top row of plates to assist the plates to resist the wind pressure.

The fifth tier has plates, which at the bottom are very slightly thinner than the formula figures. The reason for not increasing the thickness is that the formula is a very safe one, and that it is only just at the bottom of this one tier that the plates do not fully comply with it. If the whole depth of the plates in this row is considered, it will be found that there is an ample margin over the strength called for by the formula.

The accompanying diagram shows the actual thickness of the plates drawn full size, the depths of the rows are to a scale of five feet to an inch. The black portions show the areas of plates in excess of the areas required by the formula. The cross-hatched area shows the thickness allowed for corrosion.

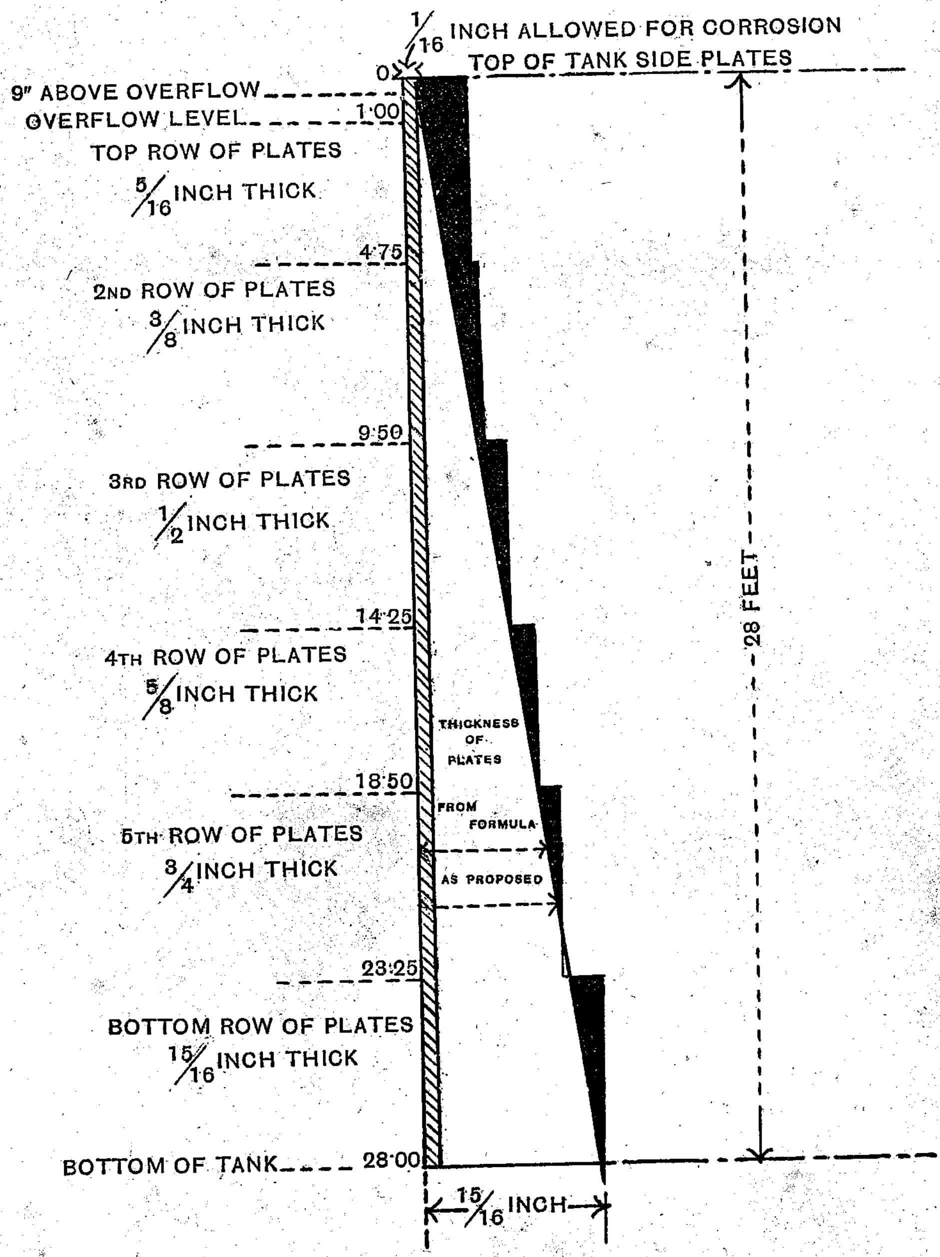

11. The vertical joints of the tank plates have to take the full stress due to the water pressure, and are designed to be butt joints with internal straps, double riveted for all plates except those in the top row, which will be single riveted. **Joints of tank plates.**

Double riveted lap joints are frequently employed in tank work, but they are not so good as butt joints, chiefly on account of the difficulty of making a watertight joint where the vertical and horizontal seams come together. With lap joints it becomes necessary at such points to hammer out the plates, and the efficiency of the joint is reduced just where it should be greatest, for the joint is the weakest part of the tank shell. For this reason butt joints are provided for the vertical seams and for the floor plates.

Properly designed vertical double riveted butt joints should have an efficiency of fully 70 per cent., but to be on the safe side and to allow of imperfect field riveting on the site, it has been considered advisable in determining the thickness of plates and size of rivets, etc., to adopt the safe figure of 60 per cent. which should be obtained readily. At the same time the specification calls for a rivet spacing which will give an efficiency of between 70 and 75 per cent. and ensure absolute safety at a very slight increase of cost.

Where strength is not of great importance, the cheapest joint may be employed. This is the single riveted lap joint which is proposed for the horizontal joints of the tank plates and for all the joints of the roof.

12. It may be well to mention here that the question of adopting a spherical-bottomed tank was considered. Such tanks are very suitable in many cases and they are often the most economical. This type is not proposed for Madras, however, for the following reasons:— **Spherical-bottomed tank considered but not proposed.**

(i) With a tank of the great dimensions proposed it would—with a spherical-bottomed tank—be extremely difficult to distribute the weight so that the pressure on the foundations should be uniform and should at no point exceed $1\frac{1}{2}$ tons per square foot, for, instead of the weight being distributed over a circular area, it would be distributed over a comparatively narrow annular area.

(ii) The cost of the compression ring to which such a tank is always attached would to a large extent neutralize any economy which might result from the adoption of a spherical-bottomed tank. This ring has to be substantial enough to resist the compressive stress produced by the weight of the tank and its contents, and furthermore a substantial bed-plate or curb has to be provided for the ring to rest on, and rockers should be placed between the compression ring and the bed-plate to take up horizontal movement due to changes of temperature. Of course the bed-plate has to be made sufficiently strong to resist the resulting thrust.

(iii) The bottom plates for a spherical tank would have to be specially shaped in dies. This not only adds to the expense, but it also renders the plates liable to distortion, and, if once distorted, it would be a very difficult matter to make good

watertight joints. It is also almost impossible to preserve a uniform thickness in spherical plates.

(iv) In order that a spherical-bottomed tank should hold the same quantity of water at a given height above ground level as a flat bottomed tank, either the masonry supporting walls must be higher than those required for a flat-bottomed tank, or else, if the masonry be no higher, then the tank must be larger, in order to hold the dead water below the top of the supporting walls. In the one case there is the extra cost of higher walls, and increased weight due to the additional masonry. In the other case more metal is required for the larger tank, and a greater load has to be borne by the foundations owing to the weight of the dead water.

Inlet and outlet and wash-out pipes.

13. As already stated the elevated tank is intended to act as a balancing tank, in order that a constant pressure may be maintained in the distributing pipes and that the pumps may not be injuriously affected by the fluctuations in consumption, fluctuations which in some cases—such as large fires—might in the absence of such a tank be great and sudden enough to make it necessary to drive the engines at speeds higher than those for which they were designed.

As a balancing tank, one pipe will suffice for both inlet and outlet. A 36-inch pipe branching off the 48-inch steel pumping main has been provided for this purpose. When the quantity pumped is in excess of the consumption it will serve as an inlet to the tank; it will serve as an outlet when the quantity pumped is less than the consumption. A 36-inch valve is provided on this inlet-outlet pipe, at a point close to the 48-inch main. By closing this valve the tank may be thrown out of action for repairs and cleaning. To empty the tank, a 9-inch wash-out branch is led off the inlet-outlet pipe on the tank side of the 36-inch valve. The wash-out will discharge into the main filter wash-out, or scour-out, channel (see Drawing No. 26).

Overflow pipe.

14. The overflow pipe is 36 inches in diameter. It is central and serves the double purpose of providing an escape for any water which may be pumped into the tank in excess of its holding capacity, and also of acting as a support for the steel roof. It is bell-mouthed at the top to a diameter of 7 feet, which means a circumference of 22 feet. The bell-mouth is intended to discharge its maximum overflow with 9 inches passing over the lip.

Treating the overflow as an ordinary straight weir 22 feet long, and using the diagrams given by Coffin, the discharge with a head of 9 inches would be 19,166 gallons per minute. By applying the formula given in Box's "Hydraulics" for a bell-mouth tank overflow, the discharge would be 18,051 gallons per minute.

It is safe then to take the capacity of the overflow at 18,000 gallons per minute with a head of 9 inches and this should be ample, for it assumes the water cut off from the town, and the pumps delivering the maximum supply which will be required for some years to come.

The quantity of 18,000 gallons per minute is the calculated discharge with a flow of 9 inches above the overflow lip, or 3 inches below the top of the tank plates. If the water surface ever reached the top of the tank, the head over the overflow would be 12 inches, and the discharge would be about 29,000 gallons per minute, which is 5,000 gallons per minute in excess of the pumping capacity of two large pumps working together and delivering water at the maximum contract rate.

Expansion joints.

15 When the tank is filled there will be a certain small amount of deflection, and when the vertical inlet-outlet and overflow pipes are heated by the sun, there will be a certain amount of expansion, accompanied by a corresponding contraction as the temperature is lowered again.

In order that these movements may not do any damage, an expansion joint will be provided below the tank on the vertical portion of each line of pipes. The first form that suggests itself is a sliding gland. If this were of iron it would soon rust up and become useless. It would therefore have to be of gun-metal, and would be elaborate and expensive. A simpler form is therefore proposed consisting of a curved flange as shown on Drawing No. 21. This should be sufficient to take up any probable movement, for, owing to the small range of temperature under the tank, the movement is not likely to be great.

Method of executing work.

16. It is proposed to carry out the work mainly, but not entirely, by contract.

One contract would comprise the excavation, concrete foundations up to the bases of the steel columns, and the piers and arches up to the underside of the steel floor joists. A second contract would comprise the supply and erection of all steel work ; but the concrete casing to the columns, the concrete tabling and the remainder of the masonry should be carried out departmentally, because this part of the work requires special care, and also because it is desirable to avoid the friction which would be likely to arise if a contractor were employed to do this work, at the same time that another contractor was erecting the steel work.

Detailed description of Steel Tank and Steel Supports.

The following description is given in the form of a specification, as this is considered the best way of insuring that nothing of importance is omitted. In order to follow the description, reference should be made to Drawings Nos. 21, 22 and 23.

Tank plates.

17. The sides of the tank will be formed of six rows of steel plates : $\frac{15}{16}$ inch, $\frac{3}{4}$ inch, $\frac{5}{8}$ inch, $\frac{1}{2}$ inch, $\frac{3}{8}$ inch and $\frac{5}{16}$ inch thick, respectively ; twenty-four plates in each row. The rows shall overlap each other inside and outside alternately. The horizontal joints of the plates are to be lap joints, single-riveted, and the vertical joints are to be butt joints with internal cover plates, double-riveted in all cases, except the top row of $\frac{5}{16}$ inch plates which will be single-riveted.

The floor plates are to be $\frac{3}{4}$ inch thick with butt joints and internal cover plates double-riveted. The junction between the bottom and side of the tank is to be formed with a steel angle 5 inches × 5 inches × $\frac{5}{8}$ inch running externally around the tank and riveted to both floor and side plates.

Riveted joints.

18. The tenderer must fill in the following table and give the width of lap or cover plates and the diameter and pitch of rivets, which must be arranged to conform with the conditions given in subsequent paragraphs of this specification. The riveting of the butt joints must be so arranged as to give seams of 70 to 75 per cent. efficiency. The riveting of the lap joints must give 50 per cent. efficiency :—

Lap Joints.						Butt Joints.				
Thickness of Plate.	Total width of Plate.	Lap at bottom of Plate.	Lap at top of Plate.	Diameter of Rivets.	Pitch of Rivets.	Cover Plates. Width.	Cover Plates. Thickness.	Diameter of Rivets.	Pitch of Rivets.	Single-or double-Riveted.
ins.	ft. ins.	ins.	ins.	ins.	ins.	ins.	ins.	ins.	ins.	
$\frac{5}{16}$										
$\frac{3}{8}$										
$\frac{1}{2}$										
$\frac{5}{8}$										
$\frac{3}{4}$										
$\frac{15}{16}$										
$\frac{3}{4}$	Floor plates.									

Holes are to be formed in the floor plates at the centre of the tank and on one side to receive the 36-inch diameter overflow and inlet-outlet pipes, respectively. The hole for the inlet-outlet pipe must be in such a position that it will be clear of the stanchions and joists.

Roof.

19. The roof of the tank will consist of $\frac{1}{8}$ inch plates, except the outer row which will be $\frac{3}{16}$ inch thick, having radial and circumferential lap joints, single-riveted, with $\frac{1}{4}$ inch steel rivets, $1\frac{1}{2}$-inch pitch. The roof will be domed to a radius of 200 feet and the outer row of plates will project 6 inches beyond the side plates of the tank and will be riveted to a 4-inch by 4-inch by $\frac{1}{2}$ inch steel angle running right round the roof to act both as a stiffener and gutter and a convenient support from which a cradle or scaffold can be suspended for painting the tank when necessary.

The roof plates will be carried on 24 main and 24 intermediate rafters formed of 5 × 4 × $\frac{1}{2}$ inch tees trussed with steel rods and bars. The purlins are to be cleated to and fixed flush with the rafters ; they will be formed of steel angles except those at the upper ends of the intermediate rafters which are to be of 5 × 4 × $\frac{3}{8}$ inch tees.

At the centre, the upper ends of the main rafters will rest upon, and be riveted to a 4 × 4 × ½-inch angle ring, 6 feet 6 inches diameter, supported on eight 5 × 4 × ½-inch tees attached to the inside of the overflow pipe. The upper ends of the intermediate rafters will rest upon 4 × 4 × ⅜-inch angle attached to the main rafters and will be cleated to the 5 × 4 × ⅜-inch tee purlin above mentioned.

At both ends of each main rafter and at the outer ends of each intermediate rafter the tees are to be bent for a short length so as to be horizontal when fixed and a shoe formed to rest evenly upon the supporting steel work. At the outer end of each rafter the web of the tee will be cut off at the shoe so as to leave a clearance of 1½ inches between it and the side plates, but the top flange will be continued horizontally over the top of the side plates and fastened by countersunk rivets to the underside of the 4 × 4 × ½-inch angle running round the roof. Packing strips of the thickness of the flange of this angle are to be inserted between the $\frac{3}{16}$-inch roof plates and the top of the tee along the horizontal portion of the rafter.

The outer ends of all the rafters will rest on brackets of steel angles and gusset plates riveted to the inside of the tank plates and a corresponding number of brackets will be fixed on the outside of the tank to support the projecting roof.

Ventilator in roof.

20. At the centre of the tank the main roof plates will terminate at the upper ends of the main rafters and a ventilator 6 feet 6 inches diameter will be carried up above the roof. This will be formed of eight 4 × 3 × ⅜-inch tees, 2 feet 3 inches long, fixed vertically above eight of the main rafters surrounded by stout copper wire gauze ½-inch mesh and carrying a mushroom-shaped cap 9 feet diameter of ⅛-inch steel plates with angle stiffeners shaped to the required curve. The junction between the tees and the cap will be formed by a 2 × 2 × ¼-inch angle ring and a similar angle ring will be fixed round the base of the tees and riveted to the rafters and roof plates.

Stanchions and beams.

21. The tank will rest upon an outer ring of piers and arches in brickwork and concrete and upon 96 internal steel stanchions with centres 11 feet × 6 feet 6 inches apart and arranged in 14 rows, each row carrying two continuous 15 × 6-inch rolled steel beams fixed 2 feet apart centre to centre, each beam being stiffened by a 12 × ½-inch flat plate riveted along its bottom flange. Both the vertical stanchions and horizontal beams will be encased in concrete which will project above the top of the beams so as to form a series of concrete tables, upon which the floor plates of the tank will rest, leaving a long narrow space for riveting each of the tank bottom-joints.

Each stanchion will be 34 feet 6 inches high over all, and will consist of two 10 × 3½-inch channels fixed 4½ inches apart by means of ½-inch plates, 12-inch wide, to which the 10 × 3½-inch channels will be riveted throughout their height. The head of each stanchion is to be formed of ½-inch plates with splayed ends riveted to the channels and side plates and having 4 × 4 × ½-inch angle stiffeners at top and a ⅝-inch cover plate 3 feet 6 inches × 1 foot 9 inches. The base of each stanchion will be formed of similar ½-inch plates with 5 × 5 × ⅝-inch angle stiffeners and ⅝-inch base plates each 3 feet 6 inches square.

The base plate of each stanchion will rest upon, and be riveted to, a grillage of four 6 × 5-inch rolled steel beams each 4 feet 9 inches long, and fixed 12 inches apart centre to centre.

Inlet-outlet pipes.

22. One set of pipes will serve as both inlet and outlet. It will consist of riveted steel pipes, 36 inches internal diameter, branching off the 48-inch diameter rising main, and terminating at the floor plates of the tank. The connection from main to tank will be controlled by a valve at the beginning of the branch.

Overflow pipes.

23. The overflow pipe inside the tank will consist of a straight steel pipe 36-inch diameter and about 19 feet 6 inches long, having its bottom flange fixed to the tank floor plates; above the 36-inch pipe will be a pipe tapering from 36 inches to 54 inches diameter 6 feet long, surmounted by a bell-mouth 18 inches deep and 7 feet diameter at the top, with its lip fixed 27 feet above the tank floor.

The 5 × 4 × ½-inch tees carrying the central roof ring and ventilator are to be riveted to the inside of the taper pipe.

Below the tank floor the overflow pipe will be reduced to 30 inches diameter by means of a taper piece 4 feet 6 inches long, the 30-inch pipe will then be carried down vertically to ground level, where it will be bent round at right angles and laid between the columns and under the side steps to discharge into outlet from the clear water tank.

Wash-out pipe.

24. The wash-out pipe will be 9 inches diameter. It will branch off the inlet pipe on the tank side of the 36-inch valve controlling the latter and will connect with 12-inch stoneware pipes leading to the main filter scour channel.

Expansion joint.

25. A special joint to take up expansion and contraction is to be fixed on the vertical portions of each of the inlet and overflow. This may take the form of a curved flange as shown on Drawing No. 21.

Tie rods.

26. The overflow pipe forms the central pillar to the tank roof and is to be braced against wind pressure by eight steel tie rods, 1 inch diameter, running from a special plate ring bolted between the bottom flange of the taper pipe and the top flange of the straight length to steel brackets riveted to the floor plates. From these brackets similar tie rods will run to the top of the side plates of the tank where they will be secured to eight of the brackets carrying the outer ends of the intermediate rafters.

Access stairway and entrance.

27. Access to the roof and interior of the tank will be obtained by means of a cast-iron spiral stairway, 5 feet diameter, 8¼-inch risers, fixed on the west side of the tank and rising from the level of the top of the masonry steps round the base of the tank up to just above the top of the side plates, a total height of about 61 feet 3 inches. This stairway will be supported by three 5 × 4 × ½-inch steel tees fixed vertically on its outside throughout the entire height and braced at intervals with rings of 3 × 3 × ½-inch steel angles cleated to the tees. At about 34 feet from the bottom a landing will be formed and a gangway carried across and riveted to brackets on the lowest side plate of the tank. At the top a similar gangway will lead to a manhole 2 feet by 1 foot 9 inches in the

tank roof. The manhole will be fitted with a self-locking watertight cover. A strong railing 3 feet 9 inches high with four rails and enclosing an area of about 6 feet square will be firmly fixed round the manhole, and tied back to the roof with steel rods. Below the manhole will be fixed inside the tank a galvanised steel ladder 28 feet long, 15 inches wide, made of $2\frac{1}{2} \times \frac{3}{8}$-inch bars with $\frac{3}{4}$-inch round rungs 9 inches apart. The top of this ladder will be fixed to the tank side plates and the bottom of the ladder will rest on the floor plates. It will have suitable stays fixed to the side plates at points one-third and two-thirds of its length.

28. The rain falling on and flowing off the roof of the tank will be arrested by the $4 \times 4 \times \frac{1}{2}$-inch angle running round the outer edge. Holes will be cut in the roof plates clear of this angle bar to lead off the water into vertical stack pipes fixed to the outside of the tank. Where these stack pipes reach the bottom of the tank they will be taken through the masonry to the inside of the piers and led down to discharge into channels formed in the concrete floor whence the water will flow into a drain leading to the main wash-out channel. **Roof water and down pipes.**

Proposed Specification of Materials and Workmanship for Steel Tank and Steel Supports.

29. All parts of the structure shall be built in accordance with approved drawings to be submitted by the makers. The workmanship and finish shall be equal to the best in modern shop practice. **Workmanship.**

All material, before being laid off or worked, shall be thoroughly straightened in the shop by methods which will not injure it.

Shearing is to be done neatly and accurately and all portions of the work exposed to view shall have a neat and uniform appearance.

30. The steel used throughout the work shall be of British manufacture and shall comply in all respects with the British Standard Specification of Structural Steel for Ship-building and shall be subjected to the Inspection and Tests therein set forth. **Quality of material.**

31. No plates will be accepted whose thickness is more than 0·01 inch less than that ordered. **Plates**

All plates and shapes shall be formed to the proper curve by cold rolling; heating or hammering for straightening or curving will not be allowed.

32. Any parts of the structure in which, in the opinion of the Engineer or Agents, difficulties may arise in field riveting, shall be assembled in the shops and temporarily erected. The various parts shall then be properly marked before shipment so as to ensure their re-erection in the same relative positions. **Erection in shops.**

In any case the whole of the floor plates, the bottom angle ring, and the bottom row of side plates, shall be so erected in the shops; also the top row of side plates, the roof framing and plates.

Erection at site.

33. The contractor will be required to provide all necessary plant and labour to ensure that no parts of the structure are injured during erection, either by falling or by being subjected to undue shocks or stresses. The use of drift pins will be allowed only for bringing together the several parts of the structure ; force will not be allowed to be used in drifting under any circumstances.

Rivets and rivet-holes.

34. The size of each rivet called for by the plans shall be understood to mean the actual size of the cold rivet before it is heated.

All rivet-holes, except those in the roof plates of the tank, are to be drilled accurately to the required spacing which is to be such as will give the most efficient seams. The vertical seams must have an efficiency of 70 to 75 per cent. The horizontal seams must have an efficiency of at least 50 per cent.

All punched and reamed holes shall be clean cuts, without torn or ragged edges.

Any burr is to be removed by a tool countersinking not more than $\frac{1}{16}$th inch. All punched holes shall be punched from the side of the plate which is intended to come in contact with the other plate.

In punched holes the diameter of the die shall not exceed that of the punch by more than $\frac{1}{16}$th inch.

Rivet holes shall be accurately spaced, eccentrically located rivet-holes if not sufficient to cause rejection shall be corrected by reaming, and rivets of larger diameter shall be used in the holes thus reamed.

Riveting.

35. Rivets shall be driven by pressure tools or pneumatic hammers wherever possible. All rivet heads are to be concentric with the holes and to be left sound, neat and shapely in form. Where possible all rivets shall be entered from the inside of the tank and driven from the outside, that is to say new heads on rivets shall always be formed from the side of the plate opposite to that on which the caulking is done.

The field forges for heating rivets shall, wherever possible, be within three yards from the holes that are in process of being riveted. All rivets shall be well heated to a brilliant cherry red, and then used with as much dispatch as possible. No rivet shall be made white hot. Every care shall be taken to heat each rivet stem evenly. Only first-class riveters shall do this work.

Caulking.

36. The caulking edges of all plates and bars are to be sheared or planed to a proper bevel. All plates shall be caulked along the bevelled edges with a round-nosed tool and only by experienced and skilled workmen. Caulking around rivet heads will not be allowed ; all leaky rivets are to be cut out and replaced by new ones. The use of foreign material for caulking, such as lead, copper filings, cement, etc., will not be permitted.

All fractured material shall be replaced free of cost.

Painting.

37. Before leaving the shop all steel work shall be thoroughly cleaned of rust and scale and, excepting the laps in contact on the tank work, shall receive one coat of approved paint or boiled linseed oil. All parts which will be inaccessible after erection shall be well painted except as stated before.

38. After the structure is erected and all seams have been caulked, it shall be tested for water-tightness, and leaky places shall be chalked or marked. The water shall then be discharged and the leaky seams shall be caulked. Leaky rivets shall be cut out and replaced by new ones. After the structure has been standing empty for 3 days it shall be re-tested and then if all joints are water-tight it shall be well cleaned and given two coats of Siderosthen or other approved paint both inside and outside of the tank and pipes. Painting in the open air shall never be done in wet weather. The Engineer will select the colour of the final coat of paint. **Testing.**

39. The contractor shall be wholly responsible for the water-tightness of the tank and for the safety of the tank and the structure supporting it. Should he consider the design in any respect insufficient in strength or otherwise unsatisfactory, he must set out his views clearly in a letter accompanying his tender, and must suggest such alterations as he considers necessary to insure absolute water-tightness of the tank and safety of the structure, at the same time stating what difference in price will result from such alterations. **Contractor responsible for water-tightness and safety.**

Proposed Specification for Alternative Designs

40. It is not advisable to bar makers from offering alternative designs, but in order that these may be comparable, they should all be in accordance with a definite specification, and for this purpose the following clauses are proposed. **Conditions which alternative designs must fulfil.**

Alternative designs for a steel tank and steel supports may be submitted and any such design as in the opinion of the Engineer shows a substantial advantage over the proposed design, will be carefully considered. It must be distinctly understood, however, that the tank itself must be of steel.

In order that alternative designs may be considered they must comply with all such of the preceding clauses of this specification as deal with materials and workmanship and must include clear detailed descriptions and drawings of what is proposed, such drawings and descriptions to be at least as detailed and clear as the descriptions given above, and as the drawings prepared by the Engineer for information of tenderers. Detailed calculations and stress sheets must be submitted with the tender, otherwise the design will not be considered.

41. The following assumptions shall be adopted in making calculations:— **Loads.**

The dead load shall consist of the weight of the structural and ornamental steel-work, platforms, roof construction, etc.

The live load shall be the contents of the tank and the wind pressure.

The wind pressure shall be assumed at 40 lbs. per square foot, acting in any direction. The surfaces of cylindrical tanks exposed to the wind shall be calculated at half of the diameter multiplied by the height. Similar assumptions may also be made for spherical and conical surfaces by using the correct heights.

Unit stresses.

42. All parts of the structure shall be proportioned so that the sum of the dead and live loads shall not cause the strains to exceed those given in the following table :—

Tension in tank plates and other parts of structure	15,000 lbs. per sq. in. of net area allowing an additional $\frac{1}{16}$th inch for corrosion.
Compression	15,000 lbs. per sq. inch reduced.
Shear on shop rivets and pins ...	12,000 „ „
„ field rivets (tank rivets) and bolts.	9,000 „ „
Shear in plates	10,000 „ „ of gross area.
Bearing pressure on shop rivets and pins...	20,000 „ „
„ „ field rivets (tank rivets)...	18,000 „ „
Fibre strain in pins	20,000 „ „

For compression members, the permissible unit strain of 15,000 lbs. per square inch shall be reduced by the formula :

$$p = 15{,}000 - 70\,\frac{l}{r}$$

where p = permissible working strain in compression, in pounds per square inch ;

l = length of member, from centre to centre of connections, in inches ;

r = least radius of gyration of section, in inches.

The ratio $\frac{l}{r}$ shall never exceed 120 for main members and 180 for struts and roof construction members.

Stresses due to wind may be neglected if they are less than 25 per cent. of the combined dead and live loads.

Unit stresses in bracing and other members taking wind stresses may be increased to 20,000 lbs. per square inch, except as shown in last paragraph.

The pressures permissible on bearing surfaces are as follows :—

Brickwork in Portland Cement mortar,	3½ tons per square foot.
Concrete	7 „ „ „
First-class Granite	15 „ „ „

Pressures on earth foundations shall not exceed 1½ tons per square foot.

Summary of Quantities, Loads, etc.

The following is a summary of the weights of materials required for the tank as designed, with a brief statement of the loads which result from them :—

Steel-work.

Weight of Steelworks.

43. *Roof* :—

Roof Plates	51,705 lbs.
Main Rafters	26,400 „
Intermediate Rafters	15,240 „
Purlins	8,947 „
Central Support	2,274 „
Ventilator	670 „
Angle Curb	4,514 „
Rivets, 1 %, say	1,100 „
Total	110,850 lbs. 49·5 tons.

Tank :—

Side Plates	... 202,363 lbs.	
Covers to Side Plates ...	... 12,756 „	
Floor Plates	... 264,965 „	
Covers to Floor Plates ...	... 64,249 „	
Brackets	... 2,619 „	
Angle Rings	... 8,893 „	
Tie Rods	.. 1,687 „	
Rivets, 1 °/₀, say	... 5,568 „	
Total	563,100 lbs.	251·4 tons.

Substructure :—

Floor Beams	... 180,640 lbs.	
Stanchions	... 407,260 „	
Grillages	... 45,600 „	
Total	633,500 lbs.	282·8 tons.

Pipes, Overflow :—

Bell-mouth	... 625 lbs.	
Taper	... 1,255 „	
Straight length in Tank ...	... 2,980 „	
Pipes below Tank ...	... 750 „	
Straight lengths and bends, say 100·1 ft.	... 12,940 „	
Total	18,550 lbs.	

Inlet :—

Straight lengths and bends, say 84·1 ft.	... 13,400 „	
Total for Pipes	31,950 lbs.	14·3 tons.
Total Steel-work		**598·00 tons.**

Masonry.

44. Weight of a cubic foot of brickwork or concrete assumed to be 130 lbs. **Weight of Masonry.**

Main Piers and Arches :—

Above springing... ...	2,148,770 lbs.	
Piers above concrete bases ...	2,086,110 „	
Concrete bases	1,868,880 „	
Total	6,103,760 lbs.	2,725 tons.

Concrete round Floor Beams, Stanchions, etc.:—

Tabling	1,087,710 lbs.	
Stanchions	2,453,880 „	
Cross Walls	1,977,430 „	
Total	5,519,020 lbs.	2,464 tons.

Concrete Steps, Walls and Arches :—

Circular Wall	... 426,140 lbs.		
Cross Walls	... 235,170 ,,		
Steps	... 166,530 ,,		
Arches between main Piers ...	... 262,340 ,,		
	Total 1,090,180 lbs.	487 tons.	

Plastering on Floor of Tank :—	94,870 lbs	43 tons.
Concrete in Main Foundations :—	8,969,350 lbs.	4,004 ,,
	Total Masonry	**9,723 tons.**

Water.

Weight of Water.

45. Weight taken for depth of 9 inches passing over lip of overflow ... 14,672,000 lbs. 6,550 tons.

Loads.

Loads.

46. *Total weight of Materials and Water :—*

Steel-work	598·0 tons.
Masonry	9,723·0 ,,
Water	6,550·0 ,,
Total	16,871·0 tons.

Load on Foundations :—

Total on foundations	16,870 tons.
Area of Concrete Base	11,500 sq. ft.
Pressure per square foot	**1·460 tons.**

Loads on Stanchions :—

Maximum load on cap of one Stanchion ...	63 tons.
Cross sectional area of steel in Stanchion ...	25·85 sq. ins.
Least radius of Gyration	3·4 inches.

Loads on Masonry :—

Maximum load on Masonry occurs at base of main Piers.

Assuming that the weight of two-thirds of roof, whole of side plates, an annular ring (104 feet—88 feet diameter) of water to 9 inches above overflow, floor plates for same ring, arching and piers, is carried by the piers :—

This weight equals	8,827,530 lbs.
Area of Piers	866·7 sq. ft.
Pressure per square foot ...	10,185 lbs.=**4·54 tons.**

SECTION V.

PIPE DISTRIBUTION SYSTEM, PRINCIPLES OF DESIGN AND GENERAL DESCRIPTION.

1. Requirements of an efficient Distribution System. 2. Faults of existing system. 3. Population to be supplied. 4. Population of Madras City as a whole. 5. Populations of Divisions. 6. Capacity of system may be increased by erecting subsidiary tanks. 7. Quantity of water per head. 8. Maximum rate of supply. 9. Pressure to be maintained. 10. Principles determining arrangement of pipes. 11. Minimum size of pipes. 12. House connections. 13. Common and luxurious service. 14. Authorised fittings and plumbing. 15. Lead Pipes for domestic supply. Action of Red Hills Water on lead. 16. Disadvantage of wrought-iron pipes for house connections. 17. Fire protection. 18. Provision for special cases. 19. Private hydrants. 20. Automatic Sprinkler Installations. 21. Drencher Installations. 22. Open tanks at ground level. 23. Charges for private fire protection. 24. Waterworks Staff should be members of the Fire Brigade.

1. The essential requirements of an efficient distribution system are :— **Requirements of an efficient Distribution System.**

(1) The supply of all consumers with an adequate quantity of water continuously throughout the day.

(2) The maintenance of a sufficient pressure throughout the distribution system.

(3) Perfect and rapid circulation of water throughout the entire system.

(4) Reasonable protection against fire.

(5) Means of detecting and stopping waste in a systematic manner.

2. The existing system fails in all these respects. The supply in many parts of the town is inadequate. It is insufficient for the reasonable requirements of the inhabitants, and over a considerable area it fails altogether during those hours of the day when water is most wanted. The pressure is deficient almost everywhere. In most of the thickly-populated areas the water available is insufficient to afford reasonable protection against fire. There is a great deal of waste, but no means exists for systematically detecting and stopping it. **Faults of existing system.**

One of the objects of this investigation is to determine what is required to remedy these faults and provide for a complete and satisfactory distribution of water, and also to estimate the probable cost. The method of procedure has been to ascertain what quantity of water is required for different parts of the city, what the existing system is capable of supplying, and then to determine what additions and alterations are needed to make efficient the existing inadequate system.

3. The first step then in planning the distribution system is to ascertain as precisely as possible the population to be supplied in the different districts of the city. In considering this question, it becomes important to decide **Population to be supplied.**

what future increase in population should be provided for, or in other words to what extent the capacity of the pipes should be enlarged in order to meet future increased demands without laying an undue burden of cost upon the present tax-payers. It is anticipated that such loans as are required to defray the cost of this work will be subject to repayment over a period of from 30 to 50 years according to the nature of the works, and thus it is considered that the distributory system should be sufficient for the needs of the consumers at the expiration of that period. The pipe system proposed in this report will, it is anticipated, suffice for all parts of the city up to 1961. For Georgetown, Rayapuram, Triplicane, Vepery and other closely built-up areas, no additional mains are likely to be required for many years after that date.

Population of Madras City as a whole.

4. In order to determine the population to be supplied, a study has been made of the census returns from 1871 to 1911. The following table gives figures for the City of Madras as a whole. The area has varied from census to census, but the variation is only a small proportion of the total area, so that no appreciable error has been caused :—

Date of Census.	Total area in acres.	Population of Madras City.	Increase in 10 years.	Percentage increase in 10 years.	Population per acre.	Percentage increase in population per acre.
1871	17,165	393,920	...	...	22·9	...
1881	17,165	398,777	4,857	1·23	23.2	1·3
1891	17,467	450,640	51,863	13·00	25·8	11·2
1901	17,280	509,346	58,706	13·00	29·5	14·3
1911	...	517,335	7,989	1·57	29·9	1·4

Populations of Divisions.

5. In order to determine the sizes of the mains required to supply the different divisions of the city, it is necessary to know not only the probable increase in the population of the city as a whole, as given above, but also the probable rate of increase in the population of each division and sub-division which is supplied by a separate main.

Unfortunately the boundaries of the divisions of Madras have been altered every census, so that it is imposible to determine the absolute increase in population for the different divisions. The best comparison that it has been possible to make is by density of population : this is fairly accurate because the alteration in area of any district is not sufficient to affect seriously the density of population.

In the following table the densities of population have been obtained from the census returns from 1871 to 1911, and the populations have been calculated by taking a constant area for each division and multiplying this area by the density as determined from the respective census returns. This was a laborious process as it meant a careful comparison of the areas of each division for every census, but it is believed that the figures represent very closely the actual populations and give the rate of increase for each division with as much accuracy as is useful in an enquiry of this nature.

Statement shewing the Population per acre and increase of Population for the eight different divisions of Madras. The figures have been obtained from Census Reports of 1871 to 1911.

Name of Division.	Tondiarpet.	George-town, West.	George-town, East.	Perambur.	Vepery.	Nungambaukam.	Triplicane.	Mylapore.	TOTAL.
Number of Division.	1	2	3	4	5	6	7	8	
Inhabited area in acres ...	3,398	474	422	2,483	1,562	2,662	845	2,816	14,662
Population per acre, 1871 ...	19·1	150·8	123·5	3·9	41·6	7·2	81·6	14·6	26·8
„ „ 1881 ...	18·6	163·5	121·5	4·3	42·7	7·1	84·1	13·5	27·1
„ „ 1891 ...	21·0	178·0	138·1	6·1	48·7	8·1	96·2	14·6	30·7
„ „ 1901 ...	24·8	188·5	143·7	9·4	55·1	9·0	111·1	16·7	34·6
„ „ 1911 ...	22·4	182·7	129·9	10·1	60·9	10·1	116·3	19·3	35·3
Total population, 1871 ...	64,885	71,474	52,097	9,701	64,901	19,221	68,940	41,113	392,332
„ „ 1881 ...	63,344	77,497	51,292	10,793	66,655	19,010	71,095	37,940	397,626
„ „ 1891 ...	71,509	84,385	58,296	15,250	76,052	21,590	81,288	41,109	449,479
„ „ 1901 ...	84,156	89,375	60,625	23,223	86,020	23,843	93,854	46,912	508,008
„ „ 1911 ..	75,986	86,584	54,833	24,981	95,172	26,929	98,254	54,443	517,182
Increase in population. 1901—1911 ...	—8,170	—2,791	—5,792	1,758	9,152	3,086	4,400	7,531	9,074
Increase in population. 1871—1911 ...	11,101	15,110	2,736	15,280	31,271	7,708	29,314	13,330	124,850
Percentage increase or decrease of population. 1871—1881 ...	— 2·6	+ 8·4	— 1·6	+ 10·3	+ 2·6	— 1·4	+ 3·1	— 7·5	+ 1·1
1881—1891 ...	+12·9	+ 8·9	+13·7	+ 41·9	+14·1	+14·1	+14·4	+ 8·1	+13·3
1891—1901 ...	+18·1	+ 5·9	+ 4·1	+ 54·1	+13·1	+11·1	+15·5	+14·4	+12·7
1901—1911 ...	— 9·7	— 3·1	— 9·6	+ 7·6	+10·6	+12·9	+ 4·7	+16·0	+ 1·8
Total percentage increase of population. 1871—1911 ...	+18·9	+20·1	+ 6·6	+113·9	+40·4	+36·7	+37·7	+31·0	+28·9
„ 1881—1911 ...	+23·3	+11·7	+ 8·2	+103·6	+37·8	+38·1	+34·6	+38·5	+27·8
„ 1891—1911 ...	+ 8·4	+ 2·8	— 5·5	+ 61·7	+23·7	+24·0	+20·2	+30·4	+14·5
Average percentage increase of population per decade ...	4·75	5·0	1·6	28·5	10·1	9·2	9·4	7·75	7·2

Note.—In determining the density of population, the uninhabited areas, such as the Island, the Esplanades, Parks, Canals and large Irrigation tanks have been excluded. Neither the area nor population of Fort St. George are included in any of the divisions.

The tables show clearly how very different have been the rates of increase in population for the different divisions. The population is increasing in all directions—North, South and West of Georgetown, though during the last decade (1901—11) there has been a check in the growth of the population in the Northern divisions of the city, but this is probably only temporary. The principal increase has been in the West. In Georgetown itself the population is likely to remain stationary or even to decrease. As the wealth of the people increases, and as railways and trams continue to extend more and more, the means of cheap and rapid transit, the number of those who are obliged to live in the densely-populated areas decreases.

So it comes about that as a general rule, and as would be expected, the rate of increase is greatest in the most thinly-populated areas and is least in those districts where the density is greatest. Thus for the forty years ending 1911, sparsely populated Perambur increased by 114 per cent., whereas crowded Georgetown, East shows a gain of but 6·6 per cent. This shows how erroneous would be deductions, based on the assumption that the increase in population will in the future be uniform all over the town.

In calculating the quantity of water to be supplied by each main in the improved Distribution System, the particular area supplied has been carefully considered, and the probable increase in population determined.

To make these tables clear the figures have been plotted as curves on the diagrams forming Plates Nos. 11, 12 and 13. The curves in Plate No. 11 show for Madras as a whole, and for each division separately the change in density of population from 1871 to 1911. Unfortunately, the first part of each curve—between 1871 and 1881—is of little value because of the terrible famine which occurred between these dates; these portions of the curves are therefore discarded. In Plates Nos. 12 and 13 are plotted curves showing the populations of the different divisions at the dates of censuses 1871, 1881, 1891, 1901 and 1911. These curves, produced as dotted lines, are used for calculating the future population in the year 1961 for which the mains are designed. From these curves we get the following figures :—

No. and Name of Division.	Population in 1911.	Estimated increase in 50 years.	Population in 1961.
1. Tondiarpet ...	75,986	23,514	99,500
2. Georgetown, West.	86,584	8,516	95,100
3. Georgetown, East...	54,833	4,314	59,300
4. Perambur ...	24,981	27,619	52,600
5. Vepery ...	95,172	24,828	120,000
6. Nungambaukam ...	26,929	9,571	36,500
7. Triplicane ...	98,254	13,746	112,000
8. Mylapore ...	54,443	30,557	85,000
Totals ...	517,182	142,665	660,000

6. Should the population increase at a much greater rate than is at present anticipated the system may still be made to serve the larger population, for the pipes are designed sufficiently large to carry the maximum quantity of 75 gallons per head for a population of 660,000 persons on the assumption that the water is supplied from one single elevated tank situated at Kilpauk. When it happens that a greater supply is required for any district, it will only be necessary to erect a subsidiary small elevated tank of sufficient size for that district, so that water may be taken into the tank during the hours of minimum consumption, and supplied to the district during the hours of maximum consumption. The pipes which are designed to serve a population of 660,000 with an average daily supply of 25 gallons per head on the assumption that the whole supply comes directly from the single elevated tank at Kilpauk, may, by means of subsidiary tanks, be made to supply a greater population with a larger quantity, say a population of 800,000 with 35 gallons per head per day.

Capacity of system may be increased by erecting subsidiary tanks.

7. Having determined the population to be provided with water in the different divisions, the quantity to be supplied per head has to be decided. The figure taken for the average daily consumption is 25 gallons per head per day. This is the quantity recommended by the Commission appointed by Government in 1890, and has formed the basis for the design of the waterworks now in course of construction. Twenty-five gallons per head per day is considered unnecessarily high by some persons who point to the much lower recorded consumption in mofussil towns of this Presidency, but enquiries have led to the conclusion that the consumption in these towns is not a reliable guide to the quantity of water which should be supplied to Madras, because in mofussil towns there is, in many cases, a scarcity of water which has to be replenished from wells. Judging by the consumption in Bombay and Calcutta, 25 gallons per head per day is certainly not too high and, if there is not to be a scarcity, every precaution must be taken to prevent waste and misuse. While some persons consider that 25 gallons per head per day is more than enough, others on the other hand argue that the supply should be much greater than 25 gallons per head per day. Any one who takes up this position must, however, do so with a full understanding of what a much larger supply would entail. He must consider the quantity of water available from existing sources and the cost of going elsewhere for the additional water required. The quantity of water available from existing sources is dealt with fully in Section II of this report where it is shown that, as far as it can be ascertained from the records available, a supply of 75 gallons per head per day—such as has been suggested—could not be obtained from present sources, even were all irrigation stopped. At a rough estimate, it may be said that an average supply of 75 gallons per head per day would cost 50 lakhs of rupees over and above the expenditure on works now in course of execution and proposed for water-supply, and that in addition it would entail approximately the same increased expenditure on drainage works. The initial cost of supply would therefore involve an expenditure of one crore of rupees, while the maintenance charges of the drainage and waterworks would be increased by something like one lakh of rupees per annum. The lesson from these figures is that all waste must be curtailed to the absolute minimum. If this is done, 25 gallons per head per day should be ample for all reasonable requirements.

Quantity of water per head.

Maximum rate of supply.

8. Twenty-five gallons per head per day is the assumed daily average throughout the year. But at certain times of the year, especially during dry hot weather, the average is likely to be considerably exceeded. In England this excess is found to be 20 to 40 per cent. on a number of days ; and the writer is of opinion that for Madras the addition of 20 per cent. to the 25-gallon average will not give too high a maximum during the hottest part of the dry weather, when well supplies diminish, streams dry up, and large quantities of water are used for gardens, etc. A higher figure is not taken, because during the hottest weather a number of large consumers of water are out of Madras, at hill stations, in Europe and elsewhere.

Experiments which the writer has carried out on the flow of sewage throughout the day show that at the present time the maximum is about $1\frac{2}{3}$ the mean flow. The variations of sewage flow may be taken as a measure of the variations of water consumption.

But up to the present it has been impossible to determine the real maximum by experiment, because the people cannot get as much water as they need, nor can they take it as quickly as they want. It is a common sight in Madras to see a dozen people waiting their turn at a tap, but, if house connections become practically universal, each of these twelve persons will draw from a separate tap, and twelve taps will be running instead of the one only : $1\frac{2}{3}$ to 1 is therefore too low a figure to be taken as the relation between the maximum and average for any day, and 2 to 1 has been taken to express this relation.

From these considerations then it is concluded that to the average annual daily water consumption 20 per cent. must be added to allow for the maximum daily consumption, and as just pointed out, the 120 per cent. thus obtained should be doubled to assure that there shall be sufficient water during the hours of maximum demand in the morning and evening. We thus arrive at a maximum consumption equal to 2·4 times the average. Even this figure does not allow for water required for fires, new moon days and special festivals when especially large quantities of water are used for baths and house cleaning.

To cover such cases it will be reasonable to plan the distribution system so as to be capable of supplying three times the average daily demand. This has been done in the scheme now submitted. The writer is convinced that this size is not too large for the pipes when newly laid, for account must be taken of the decrease in carrying capacity which occurs with usage.

Pressure to be maintained.

9. The minimum pressure maintained in mofussil towns in this Presidency is understood to be 10 feet. This is exceedingly low, compared with the usual practice in Europe and America where the least pressure is usually about 50 to 80 feet. In Bombay the lowest pressure in any district is 50 feet, and in many districts it is between 100 and 150 feet. Calcutta has just completed a scheme costing some thirty lakhs of rupees to ensure a pressure of at least 40 feet at all times in every part of the city. In these circumstances, the writer is of opinion that the minimum pressure in Madras at the average rate of supply of 25 gallons per head per day should be about 50 feet above ground level at the ends of principal mains, and the proposed additions and alterations to the existing system have been worked out to ensure this pressure. The pressure in some of the distributories will be less than this owing to the head required

to force the water through pipes, but the loss in pressure will be reduced to a minimum owing to the inter-connection of pipes which has been effected wherever possible. With such an inter-connected system, it becomes impossible to calculate exactly what the pressure will be in the small pipes, but it will certainly be but a few feet less than the pressure in the mains. The actual pressure along different points of each of the principal mains calculated for rates of supply of 25, 50 and 75 gallons per head per day respectively will be found in detail in Appendix No. I. The following are the pressures with a supply of 25 gallons per head per day at those ends of the mains where the pressures are lowest :—

End of Main.	Pressure in feet above ground level, when supplying 25 gallons per head per day.	
No. 1	50	These are the pressures at the ends of the mains furthest from the source. At nearer points the pressures will be greater.
„ 2	54	
„ 3	55	
„ 4	54	
„ 5	50	
„ 6	56	
„ 7	56	

See also Section VII, where a somewhat detailed description is given of the mains and principal branches.

An hydraulic contour map of the town of Madras has been prepared and is shown on Drawing No. 25. On this plan are drawn contour lines giving the approximate pressure of the water in the mains calculated in feet above a datum 20 feet below mean sea level. In order to determine from this plan what will be the height to which the water will rise above ground level, it is necessary to subtract the level of the ground above this datum. The blue contour lines refer to a total population of 660,000 when taking water at the rate of 75 gallons per head per day. This is an extreme rate which it is anticipated will never have to be supplied except locally in the cases of fire. The contours show that the system will take water at this rate to every part of the town. The two red contour lines refer to a supply of 25 gallons per head per day which as already stated has been taken to be the average supply throughout the city. The population to which the red lines refer is the same as in the case of the blue lines, *viz.*, 660,000.

Principles determining arrangement of pipes.

10. Having decided on the population to be supplied, the quantity of water to be provided per head per day, and the minimum pressure, the next step was to ascertain what alterations and additions should be made to the existing system to ensure the required supply of water at the minimum head decided on. The plan adopted was to ascertain what area the existing trunk and leading mains would adequately supply, and then to determine what

additional mains would be required for the areas not commanded by the existing mains. This has involved a large number of trial and error calculations to decide :—

(1) What new mains are necessary.

(2) What larger pipes should be substituted for existing pipes of insufficient capacity.

(3) What extensions of distributory pipes should be made to streets where none exist at present.

In scheming out the alterations, every effort has been made to ensure that the general arrangement of distributory pipes shall follow the lines of good modern practice. The larger mains have been so laid out that the smaller cross mains shall in most cases be fed from both ends; this method doubles the delivering capacity of the distributories, insures circulation, and avoids the multiplication of dead ends, in which water would lie stagnant and deteriorate, and deposit would be likely to accumulate. Valves have been provided on the branches to allow any section of the system to be out off for repairs without interfering with the supply to adjacent sections. The different districts are inter-connected, so that in case of fire any district may be supplied from at least two directions, or in case of the breakdown of a leading main, the supply may come through another district. All these are desirable features in a distribution system.

Minimum size of pipes.

11. The smallest new pipe proposed in this report is 4 inches in diameter. This is the least which should be allowed in distribution system, but owing to the expense of replacing all the existing 3-inch pipes by 4-inch, it is proposed to leave in the 3-inch pipes wherever they are not too small to supply domestic requirements. At the same time it is recommended that whenever 3-inch pipes are taken up they should be replaced by pipes at least 4 inches in diameter, for 3-inch pipes very quickly become choked with sediment and require frequent cleaning, and they are also quite inadequate for fire extinguishing purposes. Every pipe less then 3 inches in diameter will be taken up and replaced by a pipe at least 4 inches in diameter.

House connections.

12. House connections and domestic fittings form no part of the work estimated for in this report. They are, nevertheless, intimately connected with the Distribution Scheme. If the connections and fittings are of poor quality or badly installed, then the waste of water will be enormous. Thus it comes about that house connections and fittings form the subject-matter of a good deal of the waterworks bye-laws which are dealt with fully in Section VIII of this report. In the present section is put forward for consideration a general policy to be adopted as regards house connections, in contradistinction to the detailed rules and regulations which are dealt with in Section VIII.

It is proposed that connections should be allowed only to pucka houses that are assessed at or above a value to be settled by the Standing Committee. Mud huts and other poor class dwellings would be supplied by means of public fountains. The method of restricting waste is dealt with in Section VI in which the waste water meter system is described and recommended. This system is necessary to deal with unseen leakages in mains, house connections and fittings.

It cannot, however, be extended to deal with waste caused by leaving taps open during the day, when water is not required, and this is probably responsible for more waste than any other cause.

Four methods by which such waste may be curtailed are—

(1) Providing an intermittent supply.
(2) Limiting the number of connections.
(3) Metering every water service.
(4) House-to-house inspection.

As is pointed out in Section VI, the first method, that of providing an intermittent supply, is highly objectionable.

For reasons given in the same Section, it is not desirable to apply the plan of limiting the number of connections, beyond laying down that no building except a pucka house shall be provided with a service, and that a charge shall be made for every tap fixed beyond the maximum number allowed.

Common and luxurious service.

13. The scheme for house connections here put forward is a combination of metering the services and of house-to-house inspection. It was suggested by Lieut.-Col. W. G. King, late Sanitary Commissioner, in his Inspection Notes printed in G. O. No. 1557 M., dated 27th July, 1905, in which he says—

A "common" and a "luxurious" service should be defined. A "common" service should enable the householder to possess taps paid for by himself and reserved for his own use, but placed in such positions that they can at all times be inspected by the Municipal staff. Such a service having regard to Indian habits, would suffice for the requirements of the majority of the householders in Madras and would subserve caste requirements. Usually, such taps would be immediately in front of the house or in the varandah and could, by a simple arrangement of an iron-wire gauze faced box capable of being locked, be absolutely protected by the owner. Any one desirous of having a supply which is not open to inspection without notice should be required to pay a special water rate above that for a common service, that is, for a luxurious service and be required to hire water-meters placed at their disposal by the Corporation, and to adopt only specified fittings, and secure approval of position of pipes and taps.

If this proposal, or some modification of it, could be adopted, it should tend to limit waste. It is proposed, however, to term the services "second class" and "first class" instead of "common" and "luxurious."

From enquiries made of a number of Indians of different castes, the writer considers that this is a practical proposal, though experience may dictate modifications.

The objects to be attained are that every one shall have all the water which is legitimately required, but that waste shall be reduced to a minimum.

The house-owner would be required to put in the fittings, which would be quite inexpensive for the "second class" service.

He would also, where necessary, provide an inspection opening, which might be a small shutter, closed normally, but easily opened at any time by the Inspector, who would carry for the purpose a key like a railway carriage key.

The "first class" supply might be subject to terms similar to those now in force for the supply of large bungalows; these are :—

(1) A free supply of 160 gallons per month for every rupee of rent, with a minimum free allowance of 3,000 gallons per month.

(2) A charge of 12 annas per thousand gallons for all water used in excess of the free supply.

(3) One tap for every ten rupees of rent.

If this system of supply were adopted, it should be possible to supply every pucka house with a separate connection, so that only those living in paracherries and huts would have to go outside their dwellings for water.

In cases of negligent, misuse or waste of water, the supply could still be cut off under the powers vested in the President by Clause 196 of the Municipal Act.

Authorised fittings and plumbing.

14. If waste is not to be excessive, it is essential that there should be proper inspection, testing and stamping of fittings, and the licensing by the Corporation of competent plumbers, who alone should be allowed to do work on the water services. The use of a satisfactory form of waste prevention tap should be encouraged by the Corporation, *e.g.*, by supplying the taps at a low price, or by allowing more taps where the approved form is used.

This licensing of plumbers is provided for in the proposed Waterworks Bye-laws—see Section VIII.

Lead Pipes for domestic supply. Action of Red Hills Water on lead.

15. There is little doubt that the next few years will see a great development in the use of sanitary fittings in Madras. There is already a considerable demand for Hospitals, Hotels and public buildings. These will necessitate the laying of more complicated water service pipes for which lead is a suitable material. Moreover lead pipes are much more durable than wrought-iron pipes.

The writer has been greatly impressed by the large number of leaking wrought-iron house service pipes which he has seen in Madras. In many cases the leaks are due to rusting away of the metal. This only confirms experience in England where the usual practice is not to allow such pipes for house services, unless they are properly protected. A common method of protection is to place the pipes in a rough wooden trough which is then filled with a mixture of tar and pitch as effectually to prevent water reaching the pipe. This method, however, does not protect the inside, and in Manchester, where the water is soft, the Corporation has laid down that, if wrought-iron is used, it must be tin lined with the tin lining tafted over at the joints. Even so lead pipes are insisted on for all communication and service pipes up to 1¼-inch in diameter.

In these circumstances it seemed highly desirable to ascertain whether the Red Hills water would have any solvent action on lead pipes, for it is within the knowledge of the writer that considerable trouble has been caused when new water supplies have been introduced into a system containing large numbers of lead service pipes. Similarly in Madras considerable trouble would result should lead pipes be introduced for house services, and then afterwards it were found that the water caused lead poisoning owing to its blumbo-solvent action.

In order to decide this point, the Director of the King Institute of Preventive Medicine was communicated with. A lead pipe ¾-inch diameter and 4 feet long was sent to the Institute with the suggestion that it should be cut into

two lengths of 2 feet each, and one end of each closed so as to make two cylindrical vessels. Of these two, it was proposed that one length should be filled with water, which should be allowed to stand for a considerable time and examined at the end of one week, two weeks and four weeks; and that the other length should be filled with water, a portion of which should be analysed at the end of 12 hours, 24 hours and 48 hours, the intention being to obtain information as to the progressive action of water on lead. These experiments were carried out, and the result proves that Madras tap water has no appreciable action on lead pipes. The following is an extract from a letter dated 14th July, 1911, from Captain W. S. Patton, M.B., I.M.S., Director, King Institute of Preventive Medicine :—

The lead pipe sent by you, ¾ *by* 4 *feet, was cut into two pieces and experimented on as follows :—In one of these, Madras tap water was allowed to stand for* 24, 48, 96, 120 *and* 144 *hours; the water was then filtered and examined for lead, using sulphuretted hydrogen as a reagent. No trace of lead could be found in any of these. Madras tap water was allowed to stand in the other pipe for one, two, three, four and five weeks. In these also no lead could be found dissolved in the water.*

Carrying the experiments still further, 4 *inches of the lead pipe was slit open and flattened and the surface was well burnished with emery paper; this material was then cut into small pieces, which were put into bottles containing Madras tap water and well shaken up. The water with lead pieces in it was allowed to stand for* 24, 48, 72, 96 *and* 120 *hours respectively. In none of the samples taken out at these intervals could any lead be traced.*

The conclusion from these experiments is that lead pipes may be used safely for house services in Madras. As such pipes are more durable than iron pipes and can readily be bent round corners as desired, it is probable that they will be used to a considerable extent in the future.

Disadvantage of wrought-iron pipes for house connections.

16. In the case of Madras the writer carefully considered whether he should recommend the Corporation to insist on the use of lead pipes alone for house communication and service pipes up to 1½ inches, and properly coated cast-iron pipes for diameters of 2 inches and upward. However, in view of the fact that there are as yet no plumbers in Madras, the present is not a suitable time to make such regulation, and therefore in the Bye-laws (Section VIII) wrought-iron pipes are not forbidden, provided that they are not laid in earth unless properly surrounded, with a suitable material to protect them from corrosion. These remarks apply also to galvanised iron pipes, for there are sure to be flaws in the coating where rusting can start.

Lead pipes in a soil like Madras should be practically everlasting, the writer has seen lead pipes hundreds of years old dug up in old Roman Cities

---

Since this report was written, Mr. G. R. G. Conway, M. Inst. C. E., has sent the writer a copy of his paper on the Waterworks and Sewerage of Monterrey. It is interesting to note that referring to ¾″ galvanised steel pipes used for house connections he writes that *owing to the rapid deterioration of the house service pipes in some districts of the northern part of the city, where the soil is formed of decaying organic matter, it has been decided to use lead pipe entirely from the main to the meter.* This bears out the writer's opinion expressed in paragraph 15 above. Owing to the want of proper drainage in most parts of Madras, the sub-soil is polluted with large amount of decomposing organic matter which no doubt would act rapidly on iron pipes.

and looking as fresh as if they had been laid yesterday. Now that it has been proved that Red Hills water has no plumber solvent action, the use of lead pipes for house connections should be encouraged.

Fire protection.

17. As has already been stated, a water distributory system should be designed to provide an ample supply at adequate pressure for all purposes; and calculations have been made to determine the amount of water required for domestic purposes. Another important function of a distributoy system is to provide water for extinguishing fires. A fire protection supply differs from a domestic supply in that a large quantity of water has to be concentrated at one point in a short time instead of the uniform distribution which is required for a domestic supply. This concentration entails larger pipes, and, to provide perfectly for fire extinguishing purposes, no pipe less than 6 inches in diameter should be laid. The extra expense involved in laying this size of pipe would be very great, and would not be justified in the case of Madras where fires are fortunately of rare occurrence. Everything should be done, however, to ensure that best use is made of the system available. Owing to the network principle proposed, in which the distributory pipes are supplied from both ends, the carrying capacity will be doubled as compared with pipes supplied from one end only. In the built-up city areas hydrants will be placed at every street intersection, and should these be more than 300 feet apart, intermediate hydrants will be inserted. Hydrants will, wherever practicable, be fixed on the leading mains which will provide an ample supply. Further, opposite all important public buildings, the mains will be at least 6 inches in diameter, and in certain cases special means for fire protection will be adopted.

From a study of the Act it would appear that there is no legal responsibility laid on the Corporation to provide adequate fire protection, but there can be no doubt that there is moral obligation, and fire protection will be provided for as far as is reasonably possible in the proposed new system. For if spaced as proposed, there should be some 4 to 6 hydrants available for any fire within the closely built-up area. No single hydrant fixed on a 4-inch main would be able to supply sufficient water for the 350-gallon fire engines recently purchased by the Corporation. But if hose pipes are connected on to each hydrant and brought to a portable tank close to the fire, at least two fire engines should be able to draw a full supply.

Provision for special cases.

18. In the case of large or important buildings, such as Government buildings, Hospitals, Record Rooms, and the like, special precautions should be taken by those responsible for the buildings. Amongst suitable appliances may be mentioned private hydrants, automatic sprinkler installations, drencher installations and open tanks at ground level. These will now be described briefly.

Private hydrants.

19. These are ordinary hydrants placed on private property to provide protection to the property in case of fire. It is advisable to place private hydrants on separate connections used for fire purposes only, but in many cases this would involve a considerable expense, and they may then be placed on the ordinary connections. If such a connection is fitted with a meter—as it would be in most cases—it is advisable—indeed almost necessary—to provide a full

size bye-pass round the meter and fix on it a sealed sluice valve. The bye-pass is necessary where there is a meter, as otherwise it is very likely that the meter would get damaged and the supply stopped with the increased flow during a large fire.

Automatic Sprinkler Installations.

20. Automatic sprinkler installations are being fitted to a large extent in England to all valuable buildings, such as mills in the cotton districts, and large stores, such as the Army and Navy Stores and Messrs. Whiteley's in London. A sprinkler installation consists of lines of pipes full of water under pressure, carried through the building near the ceiling, at distances of about 8 to 10 feet apart. To these pipes are attached sprinkler heads at intervals, so that the water from them is distributed all over the room. The sprinkler pipes are closed by valves of fusible metal which is softened at a temperature of about 160° Fahrenheit so that a fire in its earliest stage causes the solder to melt and release the water, which spreads as a shower all over the room. Every sprinkler installation should be fitted with an automatic alarm valve and bell that instantly come into operation in case of water flowing through the pipes, so that a fire, and—almost as important—a leak would be instantly revealed.

In Madras, owing to the comparatively low pressure available, a sprinkler, if supplied from a main, would cease to work as soon as adjacent hydrants were opened. Sprinkler installations in Madras should therefore be supplied from tanks placed on the roofs of the buildings, and not from the main. The usefulness of sprinkler installations is shown by the fact that in London the Insurance Companies reduce their charges by 50 per cent. and for the Cotton Mills in Lancashire by as much as 70 per cent. wherever adequate sprinkler installations are provided.

Drencher Installations.

21. Drencher installations are installed for the purpose of protection against fires spreading from neighbouring buildings. They consist of a system of pipes on the external walls of a building fitted with open drencher heads over each window. In case of a fire in an adjoining building, water is turned on by means of a valve outside the building. The valve should be sealed by the Corporation. Some forms of drencher installations are arranged to work automatically in a manner similar to that already described for sprinkler installations.

Open tanks at ground level.

22. A further safeguard to important building is the provision of open tanks outside the buildings. These might be of an ornamental nature. They would be always kept full of water so that the fire engine would have an ample supply to draw upon. The tank should be connected to the mains in such a manner that the water in the latter cannot be contaminated. A design suitable for such a tank is shown on Drawing No. 44. One or more of such tanks might with advantage be constructed in the open ground surrounding the High Court buildings.

Charges for private fire protection.

23. A fire is a misfortune to the whole community as well as to the individual, and, as already stated, the Corporation are under a moral, if not legal, obligation to provide an ample supply of water for fire purposes. It is, therefore,

highly desirable that the charges for fire extinction fittings should be made as low as possible. The following rates may be considered reasonable :—

Private Hydrants	...	Annual charge Rs. 10 for each hydrant. Charge for water *nil*, but hydrants to be kept sealed by the Corporation.
Automatic Sprinkler Installations	...	Charge per annum Rs. 50. Charge for water used through sprinklers *nil*.
Outside Drencher Installations	...	Charge per annum Rs. 50. Charge for water used through drenchers *nil*.

It is recommended that water used in any of these private fire extinction arrangements should not be charged for, because there would be a saving to the Corporation in water used should there be a fire where there is a sprinkler installation, in consequence of the fire being ext nguished in its earliest stage. In the case of fires extinguished by means of sprinklers it is estimated that the consumption is less than 1,000 gallons per fire, whereas if there had been no sprinklers and the fire had got a good hold of the buildings, the water consumed would probably have run into at least 10,000 gallons. In this connection it is interesting to note that in France the law lays down that all theatre and opera stages must be protected by automatic sprinklers.

Water-works staff should be members of the Fire Brigade.

24. In Madras fire extinction is in the hands of the Police. It would be a great advantage if those superintendents and overseers of the Works Department, whose duty it is to open and close valves, should be members of the Fire Brigade in their respective districts. The head of the Brigade would thus know where to find them when required, and they would be of greatest use in locating without loss of time the most suitable hydrants, and also in closing such valves as would assist in the concentration of the greatest possible flow on to the fire. With the system proposed, it will be a simple matter to concentrate the flow to any area, and the Corporation Waterworks Department should draw up a scheme dividing the city into convenient areas and indicate what valves should be closed to concentrate the water to any of these areas. The information should be given on lithographed plans, copies of which should be distributed to the Fire Brigade Officers and to the turn-cocks.

SECTION VI.

PREVENTION OF WASTE AND LEAKAGE.

1. The proposed supply will be sufficient only if waste is prevented. 2. Madras distribution system contains many unsound pipes. 3. Waste may be reduced by intermittent water supply. 4. Dangers of an intermittent water-supply.

Methods of discovering waste and stopping it. 5. Limiting the number of connections. 6. Metering every water service. 7. House-to-house inspection. 8. Taking up and replacing all pipes and fittings. 9. Waste-water meter system. 10. Example of use of waste-water meters. 11. Proposed arrangement of waste-water meters in Madras. 12. Bulk meters. 13. Self-closing waste-not taps. 14. Force of public opinion.

The proposed supply will be sufficient only if waste is prevented.

The quantity of water to be provided by the new works is 25 gallons per head per day. The present consumption of Red Hills water in Madras City is estimated to be about 13 gallons per head per day, but this figure cannot be taken as a basis for calculation because the quantity now provided is certainly not enough to satisfy the legitimate wants of the people, and it is largely supplemented from the wells which are found on most premises, and which should be closed for sanitary reasons, as soon as an adequate pipe supply has been introduced.

The consumption in Bombay is 40 gallons per head per day, and it is only kept down to that figure by restricting the supply to certain hours of the day. When the writer was there in January, 1909, the water was turned on from 5-30 A.M. to 10 A.M., and from 4 P.M. to 7 P.M., *i.e.*, for only 7½ hours out of the 24.

In Calcutta where filtered water is used for domestic purposes only, and where an unfiltered supply is provided for flushing sewers, latrines and privies, for road-watering and for building operations, etc., the average consumption as given in the Administration Report for 1907-08 is—

Filtered water ...	...	27·6 gallons per head per day.
Unfiltered water...	...	20·5 „ „
	Total...	48·1 gallons per head per day.

These large quantities are consumed despite the fact that in both Bombay and Calcutta a special staff is engaged in the detection and prevention of waste. Waste-water meters have reduced the leakage to a great extent, and private supplies are metered in many cases, and yet the average consumption is 40 and 48 gallons per head per day, respectively.

In Madras there are few factories and it is unlikely that the consumption will be as great as in either of these two cities. But it is obvious that no precaution should be omitted to prevent waste, if the supply is to meet the demand.

Madras distribution system contains many unsound pipes.

Loss of water may occur either through leakage of mains, house connections and house fixtures, improper use, or wilful waste.

There is a general consensus of opinion that there are in Madras very many leaky joints, defective fittings, and unsound pipes. The writer has himself seen house service pipes with gaping rust holes, and main pipes almost eaten through by rust, the thin shell left, being liable to collapse whenever called upon to bear any extra pressure. Whenever a water main is bared for cleaning purposes, numerous leaking house services are exposed, in fact a perfectly water-tight house connection is the exception rather than the rule. Thus considerable leakage undoubtedly takes place even with the existing low pressure supply. With the improved water-supply under increased pressure, the waste will be greatly increased. Many small leaks will account for a large total loss which will be quite invisible, for though in some soils leaks automatically reveal themselves through the water rising to the ground surface, yet in the highly porous sand which forms so large a portion of the sub-soil of Madras, large volumes of water would pass away unnoticed.

If no means be taken to locate leaks and to stop them, then the experience of Madras will be a repetition of the experience of many cities, *viz.*, that, after incurring great expense in order to provide an ample supply of pure water under good pressure, the result is disappointing because much of the water never reaches the consumers, and what does reach them, is reduced in pressure owing to unseen losses in the distribution system.

To prevent such disappointment, and to ensure that full benefit shall be obtained from the new supply, measures must be taken to discover and remove the sources of waste. The nature of these measures should be decided on at once and the distribution system designed accordingly. If a decision is delayed until after the new water-supply has been introduced, the necessary arrangements will be more costly, the water-supply will be greatly interfered with, and time will be lost before water under adequate pressure can be supplied all over the city.

Waste may be reduced by intermittent water-supply.

One way of curtailing waste which does not involve stopping leakage is to restrict the supply to a few hours of the day by turning off the water.

It is however highly insanitary and should be adopted only after all other means have failed. Many large towns have had to resort to an intermittent supply when increasing the pressure of their water supplies. Bombay and Calcutta may be mentioned as instances, but in both cities it is recognised as an evil temporary expedient, to be abandoned as soon as possible, and the Corporations of both cities are incurring large expenditures to ensure a constant supply under adequate pressure.

Though nominally under continuous supply, many parts of Madras are at the present time actually furnished with only an intermittent supply, because, though the water is never turned off at the mains, yet it is so deficient in quantity that large areas are without water for many hours in the day—in other words are supplied intermittently, and there is little doubt that a great deal of illness in Madras is due to this fact.

The grave dangers of an intermittent water-supply are not always fully appreciated. They will now be briefly stated in order that the writer's standpoint may be appreciated when he urges that every possible precaution should be taken to insure that recourse to such a supply may not become necessary. The principal evils are three in number : **Dangers of an intermittent water-supply.**

1. *Necessity for storage*—

In order that there may be water for cooking, washing and other domestic purposes during the hours that water is cut off in the mains, storage cisterns are necessary for houses provided with water services. In practice it is found that such cisterns are never kept properly clean. They provide a home and breeding place for insects, and the resulting organic animal matter will decay and will convert a pure water into one that is dangerous to use for domestic purposes.

Again, however stringent the byelaws, it is impossible to altogether prevent pollution from sewer gas due to improper connections or insufficient protection.

In the case of the poorest houses where water is obtained from street fountains, it is necessary, with an intermittent supply, to store water in chatties and other vessels. This is unsatisfactory for several reasons. In the first place there will not be sufficient vessels to provide the quantity of water required for sanitary purposes. In the second place it is very unlikely that the vessels will be thoroughly clean—the deficient water-supply makes it difficult to clean them properly. Lastly the water will have to stand for hours in an impure atmosphere at a high temperature, and is sure to deteriorate in quality.

2. *Inspiration of impurities*—

In an intermittent system, during the hours when the water is turned off, taps opened in the lower portions of a district will empty the pipes in higher sections and will create a vacuum which will suck in whatever surrounds the pipes—frequently filthy liquid and foul gas—wherever there is the slightest leak in a pipe, joint, hydrant or other fitting.

This indrawn foul gas or the filthy liquid will be mixed with next day's drinking water ! The writer has noted many such possible—not to say probable—sources of pollution in Madras. For flushing side drains there are provided in some places pipes that are connected directly with the water main at one end, while the other end is an open mouth which dips down into the side drain. When the water-supply fails in this district, the resulting vacuum in the main will produce a sucking action which will draw into the water main, the foul emanations from the side drain, and perhaps—if the side drain is full—some of the sullage water itself. By such means may be introduced into the water system the germs of many of the intestinal diseases which account for the high death-rate of the city.

Many cases may be seen in Madras of water pipes passing unprotected under filthy accumulations of rubbish close to leaky sewers, and through sullage water.

The danger of pollution from such sources is very serious. It is true that they ought not to exist, but it is impossible to detect all of them, and therefore their existence must be treated as a fact, and for this reason every effort should be made, and every precaution should be taken, to insure that all water pipes throughout the city shall be continuously full of water under pressure so that danger of contamination, by the means just described, may be reduced to a minimum, if not eliminated altogether.

3 *Danger of Fire—*

With an intermittent water-supply the danger from fire will be appreciated as soon as it is mentioned, for a fire is just as likely as not, to occur during a period of intermission in the supply, and in such a case there would be no water available for extinguishing purposes, until the turn-cocks could reach the spot and open the necessary valves.

This enumeration of some of the faults of an intermittent water-supply will explain the attitude taken up by the writer—that from a sanitary point of view, in planning the alterations and additions to the water distribution system, it is essential to make such provision as will render remote the necessity of resorting to an intermittent supply, and for this reason the importance of limiting the waste is repeatedly urged, and the adoption of methods to secure this end are strongly recommended. If means to prevent waste are not used, then it is certain that the supply will be only intermittent, and will have all the evils which have been enumerated above.

Methods of discovering waste and stopping it.

Methods of checking waste other than restricting the hours of supply are:—

(1) Limiting the number of connections.
(2) Metering every water service.
(3) House-to-house inspection.
(4) Taking up and replacing all pipes and fittings.
(5) Waste-water meter system.

Dealing with these in order.

Limiting the number of connections.

5. One method of checking waste is to limit the number of connections, and there is no doubt that by such means the quantity of water wasted through defective domestic fittings may be considerably reduced.

It is generally agreed that it would be a good thing to amend Clause 193 of the Municipal Act or to provide byelaws so as to limit for any premises the number of connections and taps which may be fixed, and the quantity of water which may be used for "domestic purposes."

It is doubtful however, if it would be possible or desirable, to refuse a connection to any pucka house where the owner is willing to pay for it. In many cases the prevalence of gosha habits would be a strong inducement to continue the use of sewage polluted wells, if water could not be obtained except by going to a public tap. And where such wells are not available, a limitation of tap connections might reduce the use of water to a point below the minimum necessary to insure sanitary conditions.

Connections have already been given to many poor houses in Triplicane. There would be loud complaints if these connections were to be cut off after spending 60 lakhs of rupees on an improved water-supply: and owners of houses of a similar class in other divisions of the city, will demand the same privilege.

Metering every water service.

6. Metering every water service and charging for the water used, is an excellent way of determining and checking waste. The consumption as measured by the meter indicates to what extent there is waste, and the monthly bill, which depends on the consumption acts as an automatic check on the waste, for the man who pays the bill will take precautions to prevent the amount being unreasonably great.

This system has been adopted to a considerable extent in America. In large wealthy cities, where the consumption per head is high, it is perhaps the most economical way of limiting waste. It has the further advantage of providing the most equitable basis of charging for water, as each house-holder pays for the actual quantity consumed in the house.

The weak point of the system is that it takes no cognisance of leakage in the mains, but used in combination with the waste-water meter system described below, it forms the most efficient known method of checking leakage and waste, and it is proposed to use meters on the connections of all the better class houses in Madras. Our city is, however, not rich enough to warrant the expenditure necessary to meter every connection.

In estimating the amount of this expenditure we may take the average cost of a meter, including meter pit and fixing, at Rs. 100, and assuming 40,000 connections to be made eventually.

Capital Cost.

Then the first cost would be 40,000 meters at Rs. 100 ...	Rs.	40,00,000

Annual Expenditure.

Staff, materials, and replacing worn parts of meters 40,000 meters at Rs. 3	Rs.	1,20,000
Interest on Capital *plus* sinking fund Rs. 40,00,000 at 8 per cent.	„	3,20,000
Total...	Rs.	4,40,000

With the house services proposed in this Report (pages 79, 80 and 115) meters will be used only for those houses where a "first-class" service is required. In such cases the house-holders will bear the cost both of installing and of maintaining the meters, so that no burden will be thrown on the general tax-payer.

House-to-house inspection.

7. House-to-house inspection has often been found very effective in reducing the waste of water. Manchester, Glasgow, Newcastle and Cambridge may be cited as examples of towns where a large reduction in consumption resulted from careful house-to-house inspection. It is, however, a very costly method, and its success in Madras would depend largely on the honesty of comparatively low-paid Inspectors.

Furthermore, it is found that the necessarily frequent entry into houses by Waterworks Inspectors, is objectionable to the inhabitants even in Europe. It would be much more so in Madras, where the caste system and gosha habits play so important a part in domestic economy.

Another fault of the method is that while a reduction is effected in the waste from cisterns, taps and other fittings inside th› house, yet it fails to discover the invisible underground leakage, which occurs in the mains, house pipes and connections. In Madras leakage, from these sources is already great. It is certain to be considerably increased when the water is first supplied under increased pressure.

For these reasons house-to-house inspection is not sufficient in Madras.

Taking up and replacing all pipes and fittings.

8. Where the whole system has failed, the taking up and replacing of all pipes and fittings may be adopted with advantage, and will produce excellent results. Norwich, in England, is a well-known example. In this city the consumption was reduced from 40 to 15 gallons per head per day by taking up nearly all the pipes and fittings and replacing them by others of better quality.

But the cost of this method is very great, and in Madras, where most of the pipes are believed to be watertight and serviceable, there would be no justification for incurring the great expense. Further, the inconvenience to consumers would not only be very great, but would also be prolonged over the considerable period required to complete the renewal of pipes and fittings.

Again, though an excellent system would be secured with few sources of leakage, yet some plan of maintenance would still have to be devised to ensure the ready detection and remedy of losses due to waste, and to such leaks as would develop in course of time.

Waste-water meter system.

9. In the waste-water meter system the city is divided into districts, and the mains are so arranged that, by closing a few valves, the whole of the water required for any district is supplied through a pipe on which is placed a waste-water meter. This form of meter records continuously the flow of water through it on a diagram attached to a drum which is caused to rotate by means of a clock.

The flow which takes place between midnight and 4 A.M. will be mostly leakage and waste.

The diagrams for the whole city are brought in daily or weekly, as may be thought best, and from them the Engineer is able to see at a glance in which districts water is most wasted, and on these districts is concentrated the energy of the staff.

Having cured the worst areas, the next worst are dealt with, and so on. If the town is completely metered, an efficient watch is kept over all the districts, the changes of pressure due to curing leaks, cause districts to alter in character, and in some districts leakage grows more rapidly than in others. Hence the need for a continuous record such as will be obtained under the proposed system.

In order to localise the waste, an Inspector conducts a night inspection. Beginning about midnight, he sounds and closes all stop-cocks on the connections, closing the sluice valves on each branch as soon as all the stop-cocks on that branch have been shut down. The time is carefully noted in every case, and, by referring to the recorder diagram, the effect of closing each valve can be ascertained, and the points of leakage located within narrow limits; their positions are determined more exactly by means of stethoscopes.

The premises where excess water is being used are inspected during the next few days, and notice is served to remedy any defects which may be found. If the leakage has been traced to the main or house connection, the road is opened up, and the default repaired.

In order to make the procedure clear and to illustrate the nature of the inspections, two diagrams are shown on Plate No. 14. Fig. 1, adapted from Mins. Inst. C. E., Vol. XLII, is a waste-water meter diagram reduced to about one-third its original scale. The diagram shows an actual case of reduction in waste effected by means of the waste-water meter system. It was taken for a district in Liverpool, having a population of about 2,150 and consisting of low class dwelling houses.

The full black line curve was recorded on the diagram taken to detect the sources of waste. It will be seen that the night inspection took place between 11 P.M. and 5 A.M. and the dotted black line shews the consumption of water that would have taken place had no valves been closed for the inspection.

The red lines shew the consumption after remedying the defects discovered by the night inspection. The consumption was reduced from 27½ to 9¼ gallons per head per day, and the rate of flow between 1 A.M. and 5 P.M.—mostly leakage—was reduced from 21¼ to 5¼ gallons per head per day.

Fig. 2 is part of an imaginary diagram—full size—showing the record of a night inspection, and the effect of closing diffierent valves.

The waste-water meter system is very generally used throughout England. The whole of London is now controlled by this system and some 500 other towns in Great Britain have adopted it. Waste-water meters have been introduced into Bombay and Calcutta as the best method of localising leakage and waste and the system is being extended in both these cities.

The effect in Calcutta has been to reduce the consumption under constant supply from 22,000,000 to 17,000,000 gallons per day, a saving of 5,000,000 gallons per day or nearly 23 per cent.

The result of adopting the system in Bombay is shown by the following extract taken from the Administration Report of the Municipal Commissioner for 1905:—

It having been ascertained beyond doubt that a very large quantity of water was leaking from the water mains and service pipes, it was deemed expedient to increase the staff engaged in this work and form a Special Branch whose duties would consist of the detection of waste and the location of defects upon the water mains, service pipes, fittings, etc. Since the 1st of September, 1904, this system has been followed with considerable success. Many underground leaks and defects, some of a very extensive nature, having been brought to light and repaired: consequently the supply aud pressure in several districts has been much improved.

It is strongly recommended that the waste-water meter system be applied to Madras at the same time that the new Distributory pipes are laid. It can be readily done at that time at much less cost than would be involved if the system were applied to a net work of pipes not designed for it. The desirability is emphasized by the examples of Bombay and Calcutta. In both these Indian cities the inhabitants have had to put up with all the inconvenience and the great dangers to health which accompany an intermittent supply, such as many parts of Madras now receive.

In both Bombay and Calcutta the waste-water meter system has been adopted to enable the authorities to provide a constant supply. In Madras it will be well to introduce the system at once, so that the new supply may from the beginning possess the great advantage of being continuous throughout the day.

Examples of use of waste-water meters.

10. Numerous instances may be cited of the reduction in water consumption which has been affected by the intelligent use of waste-water meters. It will be sufficient here to give one example, that of Bradford, England. With the view of economising as much as possible all the water available, Mr. (now Sir Alexander) Binnie divided the town into 26 districts each fitted with a waste-water meter, the system was thoroughly examined and sources of loss located in a manner similar to that described in the last paragraph.

The result of a year's working is given in the following table :—

	Gallons per 24 hours.		
	Before Inspection.	After partial Inspection and Repair.	Saving.
Average total consumption	3,048,700	2,088,900	...
Waste	2,217,600	922,800	1,294,800

A saving of 43 °/ₒ of the water used.

It is interesting to note the causes of the leakage which were discovered. They are given as—

1,348 defective fittings in private houses.
35 faults in supply mains and fittings.
73 defective services.

The economy effected was carefully worked out and is worth attention.

The water saved as given in the above table is 1,294,800 gallons per day = 472,602,000 gallons per year which at 6½*d.* per 1,000 gallons represents a saving of £12,799-12-9 per annum.

The cost of the installation was—

For Meters	£1,839
For Valves	„ 556
Total	£2,395

This expenditure spread over 12 years gives an annual charge of 1/12th £2,395, say	£200
Wages and working cost	„ 722
Total annual charge	£922

Subtracting this from the saving in cost of water, the resulting economy was £12,799 —£922 = £11,877 or Rs. 1,78,155 per annum.

Or put in another form : If this water had not been saved, the capital expenditure which would have been required on new works to supply the water wasted would have been about 35 lakhs of rupees, whereas the capitalised cost of the meters and upkeep is about 2¾ lakhs.

The capital saving effected by adopting the system was therefore about 32¼ lakhs of rupees.

A further example of the saving of waste which may be effected by the use of waste-water meters is afforded by the following figures which refer to the consumption of filtered water in the city of Calcutta.

The statement compares the Consumption of Water at the date of introduction of the constant supply with that on 31st March, 1909.

Date of Introduction of constant supply.	DISTRICT.	Total Gallons per day.		Gallons per head per day.		Minimum Supply per head at night.		Population.
		At commencement of continuous supply.	On 31st March, 1909.	At commencement.	On 31st March, 1909.	At commencement.	On 31st March, 1909.	On 31st March, 1909.
1903—06	Cornwallis Street ...	4,699,381	2,884,930	49·2	29·5	47·7	7·9	95,479
1906—07	Shambazar ...	5,885,780	3,662,771	41·1	25·5	38·5	8·2	143,188
1903—05	Circular Road ...	1,736,807	1,348,263	31·4	25·9	25·1	7·3	55,255
1906—07	Entally	1,241,729	843,953	17·2	11·7	12·2	3·9	72,065
1903—05	Halliday Street ...	4,072,254	3,004,316	30·1	23·0	39·2	16·7	132,217
1905—07	Wellington Square ...	5,621,424	3,688,153	38·5	24·6	35·2	16·8	159,936
1907—09	Bhowanipur ...	3,463,883	2,917,529	19·9	15·4	9·4	7·2	189,290
	Total...	26,721,258	18,349,915	33·8	21·6	...	...	847,430

Proposed arrangement of Waste-water Meters in Madras.

11. On Drawing No. 63 is shown the arrangement of waste-water meters proposed for Madras. The plan is to a scale of 10 inches to a mile and shows every individual main and distributory pipe as they will be when the proposed system is completed. The built-up portion of the city is shown divided into convenient waste-water meter areas which are indicated by different colours, each area is governed by a meter to be fixed in the position shown by the dark

circle. The size of the meter is given at the side of the circle. In addition to the mains and meter, the valves are also shown. They have been so arranged that any area may be isolated from the adjoining areas when it is desired to ascertain the amount of leakage and waste. The following list gives the size of each meter and the present population of the area which it will serve :—

LIST OF WASTE-WATER DETECTING METERS.

Area No.	Size of Meter in inches.	Present Population of Area.	Municipal Division.	Area No.	Size of Meter in inches.	Present Population of Area.	Municipal Division.
1	6	4,677	Tondiarpet.	29	4	3,000	Pursawakam.
2	4	1,600	"	30	6	4,968	"
3	6	4,600	"	31	4	2,390	"
4	6	4,500	"	32	6	5,000	Vepery.
5	4	3,500	"	33	6	6,000	"
6	6	7,000	"	34	6	4,930	"
7	4	3,700	"	35	6	5,600	"
8	4	3,700	"	36	4	553	"
9	4	1,977	"	37	4	370	"
10	4	1,321	"	38	6	4,923	Georgetown.
11	4	3,751	"	39	6	6,000	"
12	8	7,300	"	40	6	7,000	"
13	8	7,300	"	41	4	3,000	"
14	6	4,683	"	42	6	4,600	"
15	4	1,890	"	43	6	5,900	"
16	8	8,901	Perambur.	44	6	5,000	"
17	6	4,500	"	45	6	6,153	"
18	4	2,964	Pursawaukam.	46	6	4,370	"
19	4	3,000	"	47	6	5,260	"
20	4	3,400	"	48	4	3,000	"
21	4	2,300	"	49	6	6,340	"
22	6	4,300	"	50	6	4,800	"
23	6	6,279	Vepery.	51	8	7,500	"
24	4	3,600	Pursawaukam.	51*a*	6	4,100	"
25	4	3,600	"	52	6	4,200	"
26	6	7,000	Vepery.	53	6	4,200	"
27	4	3,000	"	54	4	2,900	"
28	6	6,300	Pursawaukam.	55	4	3,000	"

List of Waste-water Detecting Meters—(*continued.*)

Area No.	Size of Meter in inches.	Present Population of Area.	Municipal Division.	Area No.	Size of Meter in inches.	Present Population of Area.	Municipal Division.
56	6	4,400	Georgetown.	85	4	4,559	Egmore.
56*a*	6	4,490	„	86	6	6,232	Triplicane.
57	6	5,600	„	87	6	5,285	„
57*a*	6	5,000	„	88	6	6,058	„
58	4	3,000	„	88*a*	4	3,600	„
59	6	7,000	„	89	6	5,077	„
59*a*	6	7,000	„	90	8	6,968	„
60	6	6,480	„	91	6	6,000	„
61	4	3,290	„	91*a*	4	2,700	„
62	4	2,370	„	92	6	5,220	„
63	4	1,600	Pursawaukam.	93	8	7,850	„
64	6	5,900	„	94	6	6,330	„
65	4	3,000	„	95	6	5,200	„
66	4	1,334	„	96	6	5,000	„
67	4	1,500	Egmore.	96*a*	6	5,000	„
68	4	2,200	„	97	6	4,700	„
69	4	1,000	„	98	6	4,000	Mylapore.
70	4	3,450	Nungumbaukam.	99	4	3,600	„
71	4	1,057	„	100	4	2,200	„
72	6	4,633	Egmore.	101	4	2,250	„
73	4	1,949	„	102	4	3,457	„
74	4	2,000	„	103	4	2,930	„
75	6	5,000	„	104	4	2,930	„
76	4	2,000	„	105	4	2,400	„
77	4	4,070	Chintadripet.	106	4	3,500	„
78	4	2,000	„	107	4	1,160	„
79	6	5,200	„	108	6	5,000	„
80	6	5,200	„	109	4	1,200	Triplicane.
81	6	5,000	„	110	4	2,000	Mylapore.
82	4	3,000	„	111	4	3,400	„
83	6	4,416	„	112	4	1,500	„
84	6	6,000	Egmore.	113	6	4,900	„

Summarising the above list, the numbers of meters of different sizes to be fixed are—

56 No. 4-inch meters.
58 ,, 6 ,,
6 ,, 8 ,,

No particular make of meter is specified. But the meter selected should be of a type which has been used extensively for a number of years, and has proved reliable, accurate and unlikely to get out of order. It should also be provided with an accurate eight-day clock fittted with an air-tight case. The recorder drum which is driven by the clock should be capable of being set so as to make one revolution in 24 hours or in 7 days as required. When a night waste-detecting inspection is to be carried out, the drum is set to rotate once in 24 hours. When the inspection has been completed, a seven-day diagram is fixed and the drum is set to make one revolution in seven days and thus give a complete record of a week's working.

Bulk meters.

12. The waste-water meters described in the last paragraphs are for the purpose of detecting leakage in each of the areas into which Madras has been divided for water-waste prevention purposes. In addition, an allowance has been made in the estimates for Venturi meters to be placed at head of each of the seven principal mains. These meters will be provided with recorders which will trace continuously on a diagram the rate of flow, and will greatly assist in the systematic waste preventien by indicating the part of the town in which the waste is greatest and should first be attacked.

Self-closing waste-not taps.

13. One source of a great deal of water-waste in Madras is the public taps that are provided at different parts of the City. Any day numbers of these taps may be seen left open, the water running to waste. To minimise this loss the Corporation Engineer has from time to time removed a large number of taps. This is, however, an unsatisfactory method of curtailing the waste because the existing taps are not sufficient in number for the needs of the community. Indeed it is proposed in the scheme now presented to increase the number of public taps by 600. It is therefore highly desirable that all fountains should be fitted with self-closing taps. It is now possible to obtain reliable taps fitted with an automatic arrangement which closes even if the handle be tied or propped up. With these taps the water cannot be made to run continuously, for it is cut off when a given quantity, say, two or three gallons, has been drawn. To obtain more water, the handle must be released and again actuated. Such taps should be fitted on all existing and new fountains. In the scheme now submitted, provision has been made to fix only self-closing waste-not taps on the new fountains. A similar tap might well be introduced into houses and it is worthy of consideration whether the Corporation could not encourage the use of such taps by giving some advantage to house-owners who instal them. For instance, the number of taps to be granted free to any house might be increased should waste-not self-closing taps be solely used and be placed in such positions that they can be readily inspected by Corporation Officials. There is no doubt that by installing such taps universally, a large amount of waste would be stopped.

14. In closing this section it will be well to emphasise the fact that the importance of reducing the waste cannot be exaggerated. In his latest Administration Report (1909-10), the Chairman of the Calcutta Corporation, referring to prevention of waste of water, writes:—*The matter is a most important one, as the success of the scheme for the improvement of the water-supply depends largely upon the control of waste.* Water in Madras is a valuable commodity. There will be enough for every legitimate purpose if it is not wasted. If water-waste is allowed to go unchecked then there will surely be scarcity with all its attendant ills.

Force of public opinion.

The stopping of waste is the most important function of those in charge of a water distribution system. The methods to be adopted to limit it have been described above. Further, in the last section of this Report is given a set of proposed bye-laws, whose most important purpose is to prevent the waste, mis-use and contamination of water. But to prevent waste effectually it is necessary to secure the co-operation of the consumers, and to educate public opinion to a full appreciation of the fact that "wilful waste brings woeful want." So that he who wastes wilfully may be regarded as an offender against the community. The force of public opinion will then act as a stronger deterrent than any rules, regulations or fines.

SECTION VII.

DETAILS OF PROPOSED DISTRIBUTION SYSTEM.

1. General arrangement. 2. Principal mains and sub-mains in proposed system. 3. Carrying capacity of mains and pressure of water provided. 4. Pipe-laying work that should be taken up first. 5. Leading mains to encircle divisions. 6. Rider mains. 7. Air valves. 8. Wash-outs. 9. Sluice valves. 10. Venturi meters. 11. Hatch-boxes. 12. Cast-iron Pipe joints. 13. Hydrants. 14. Public fountains. Self-closing taps. 15. Fountains and sewer flushing. 16. Use of unfiltered water. 17. Demand for unfiltered water.

General arrangement.

1. The water, which is pumped by the plant described in Section III, will be carried by a 48-inch steel main for a distance of about 3,000 feet to a point opposite the existing masonry shaft at the end of the existing Delivery Channel. Here the steel main will be connected to the existing mains and to the new mains. Drawing No. 26 shows a plan and section of the steel main, and Drawing No. 27 shows in detail its connection to the existing and proposed mains. Drawing No. 30 shows the hydraulic gradients and ground level of the 48-inch steel main.

The general arrangement of the old and new mains is shown in Plate No. 15 which also shows in outline the areas which are to be supplied by different mains. The area supplied by a main coloured red being edged in red and so on. The new arrangement is shown in more detail on Drawing No. 25 which is a plan of Madras City to a scale of 5 inches to a mile. On this plan have been marked the areas supplied and the mains supplying them.

The details of the connections of the steel main to the new and the existing mains are shown on Drawing No. 27, where it will be seen that each connection is governed by a valve so that the water may be shut off from any main while the others are still in use. When the new water-supply is first introduced, the valves will be partially closed so that the pressure on the old pipes may be kept low, until defective pipes have been removed it is proved that the remainder are strong enough to bear the full pressure of the new supply.

The enlargement of, the addition to, and extension of, the existing Distribution System has proved a complicated problem.

It was necessary first to work out the carrying capacity of the existing mains so as to determine where the present system is deficient. It had then to be decided what areas the existing mains should supply and what additional mains and sub-mains should be laid to reinforce the system. As a result of these investigations the whole city has been divided into seven divisions each supplied from one principal main with sub-mains as required. In all there are seventeen principal mains and sub-mains. Each main division area has been sub-divided into waste-water meter areas which—by closing a few valves—can be readily isolated. As will be seen by a reference to Drawing No. 63 there are 120 such

areas. Valves have been provided in suitable positions to facilitate the work of waste-water detection, and also to enable short lengths of pipe to be shut off for repairs without interfering with the water-supply of the rest of the area. Further the pipes are so arranged as to ensure a good circulation of water, and also to provide for inter-communication of areas which can, however, be readily isolated by closing a few valves. Many calculations and re-calculations were necessary before a satisfactory system could be evolved.

As the result of many trial calculations, it was decided to provide two principal new large mains, one to supply Rayapuram, Tondiarpet and part of Georgetown and Pursawaukam, and the other to supply Mylapore and part of Triplicane. When the system is complete, there will be in all seven principal mains each supplying one of the principal water divisions, and ten sub or branch mains supplying sub-divisions.

Principal mains and sub-mains in proposed system.

2. The principal mains and sub-mains proposed in the scheme now submitted are as follows :—

Main No. 1 (Drawing No. 31) is a new 42-inch cast-iron main starting from the end of the steel pipe at Kilpauk and running through Pursawaukam and Georgetown to Tondiarpet. It supplies portions of Pursawaukam, supplements the present defective Georgetown supply, and then continues as a 30-inch main up through Rayapuram and Tondiarpet, terminating in a 6-inch main at the Corporation boundary on Tiruvattiyur High Road. Drawing No. 16 shows the hydraulic gradients, and the sizes of the pipes proposed. The main will be 35,162 feet long and is one of the two principal new mains proposed.

At its starting point, Main No. 1 will cross the Otteri Nulla in an oblique direction approximately parallel to the existing Main No. 3. At this crossing, the pipes will be carried on masonry supports, so as to be 5 feet 6 inches above the bed of the stream which will allow sufficient clear waterway to obviate the danger of water rising against the pipe, and subjecting it to a pressure which would be likely to move it out of line.

As it passes along Elephant Gate Road, the pipe will cross the Madras and Southern Mahratta Railway. Here it will be laid underground and encased in concrete. A little beyond the Madras and Southern Mahratta Railway crossing, it will pass over the Buckingham Canal. At this point, it will be reduced from 42 inches to 24 inches in diameter for a length of about 75 feet, and will be suspended by means of iron hangers from the North side of the existing road bridge, which is sufficiently strong for the purpose. Further on, in Monegar Choultry Road, the pipe will again cross the Madras and Southern Mahratta Railway, and, as in the previous crossing of this railway, it will be laid underground and surrounded with concrete.

Main No. 2 (see Drawing No. 32) is partly a new and partly an old main which supplies Perambur and portions of Pursawaukam and Tondiarpet. It begins as an 18-inch branch off Main No. 1, and gradually diminishes to 14-inch, the new pipe joining the existing 14-inch main at the junction of Gantz Road and Stevenson Road. It branches from Main No. 1 at a point about 2,860 feet from the end of the 48-inch steel main and terminates at the junction of Cemetery Road and Tiruvattiyur High Road in Tondiarpet. It has a total length of 17,692 feet.

Main No. 3 (see Drawing No. 33) is the existing main starting from the masonry shaft at Kilpauk. It will be connected up to the 48-inch steel main and will supply most of Pursawaukum, Vepery and also the South-west part of Georgetown; at present it also supplies the 7th and 8th divisions, but these areas will be cut out and supplied by Main No. 1. The main ends as a 10-inch pipe at the junction of General Hospital Road and Mint Street. It has a total length of 17,559 feet.

Main No. 4 (see Drawing No. 34) branches off Main No. 3 at a point about 4,300 feet from the 48-inch steel main. It is to supply Chintadripet and portions of Egmore and Triplicane. Beginning as a 36-inch main, it gradually diminishes to 14 inches in diameter, and ends at the junction of Ice House Road and Triplicane High Road. It has a total length of 14,770 feet.

Main No. 5 (see Drawing No. 35) starts as a 22-inch pipe branching off Main No. 4 at a point about 2,800 feet from where the latter leaves Main No. 3. It supplies portions of Vepery and East Georgetown, and ends as a 12-inch main at the junction of Angappa Naick Street and Jaffer Syrang Street. Its length is 15,688 feet.

Main No. 6 (see Drawing No. 36) is part of the existing main. It will branch off the new Main No. 7 (described below) at the junction of Mount Road and St. George's Cathedral Road. It is to supply the South-west portions of Mylapore. It is a 14-inch pipe which runs down Mount Road, Cenotaph Road and Chamier's Road, ending in a junction with Main No. 7 at the corner of Brodie's Road and Greenaway's Road. It has a total length of 17,250 feet.

Main No. 7 (see Drawing No. 37) is a new main to Mylapore. It starts from the end of the steel main at Kilpauk as a 30-inch pipe, and passes through Egmore and down Nungambaukam High Road to the junction of Mount Road and St. George's Cathedral Road at which point Main No. 6 branches off. Main No. 7 proper passes down St. George's Cathedral Road through Mylapore and ends in Adyar at the junction of Greenway's Road and Brodie's Road, where it connects with the end of Main No. 6. It will supply most of Mylapore, Egmore and Nungambaukam. It has a total length of 27,800 feet.

Immediately after its starting point Main No. 7 will cross the Otteri Nulla on concrete piers at a height of about 5 feet clear of the bed of Nulla, so as to leave an ample waterway.

On its way through Egmore, it will cross the Government Brickfields, where deep excavations have been made. Across these excavations, the pipe will be carried on concrete piers, of which about 94 will be required.

After leaving the brickfields, the main passes under the South Indian Railway. Here it will be encased in concrete. A short distance after it enters the Nungambaukam High Road, the 30-inch pipe will cross over the Cooum, suspended from the road bridge by means of steel straps.

The above are the principal mains, as they will be when the scheme is complete. In addition to these, ten branch mains (see Drawings Nos. 38, 39, 40 and 41) have been worked out. They vary in diameter from 18-inch to 6-inch. It would be almost impossible to make any useful calculations of the deliveries and hydraulic gradients of the complicated, inter-connected system of distributing pipes between branches, and this has only been done in a few special cases.

Carrying capacity of mains and pressure of water provided.

3. Full particulars as to the population, the quantity of water supplied and the hydraulic gradients of the mains and branches are given on Drawings Nos. 31 to 41, and these should be carefully studied by anyone desirous of appreciating the capacity of the proposed scheme. Careful calculations have been made of the carrying capacity and pressures of water in the mains and branches under different conditions. The figures are given in some detail in Appendix No. 1. A summary showing the pressures at the ends of different mains and branches is set out in the following table :—

Statement showing Hydraulic Pressure at the end of the Mains and Sub-mains with different Supplies for the Madras City.

Main Number.	Starting from	Ending at	Supply at 75 gallons per head per day.		Supply at 50 gallons per head per day.		Supply at 25 gallons per head per day.	
			Hydraulic level.	Head above ground level.	Hydraulic level.	Head above ground level.	Hydraulic level.	Head above ground level.
		MAINS.		feet.		feet.		feet.
1 ...	48 inches Steel Main at Kilpauk.	North end of Tondiarpet ...	47·6	12·6	71·0	36·0	85·2	50·2
2 ..	2,860 feet on Main No. 1.	Junction of Cemetery Road and Tiruvattiyur High Road in Tondiarpet Joins Main No. 1.	66·9	33·9	79·7	46·7	87·4	54·4
3 ...	48 inches Steel Main at Kilpauk.	Junction of General Hospital Road and Mint Street, Georgetown. Joins Main No. 5.	51·3	20·3	72·7	41·7	85·7	54·7
4 ...	4,300 feet on Main No. 3.	Junction of Triplicane High Road and Ice House Road, Triplicane.	51·8	19·8	73·0	41·0	85·8	53·8
5 ...	2,820 feet on Main No. 4.	Junction of Narayana Naicken Street and Angappa Naicken Street in Georgetown.	49·7	13·7	72·0	36·0	85·5	49·5
6 ...	13,100 feet on Main No. 7.	Junction of Greenway's Road and Brodie's Road, Adyar.	56·6	26·6	75·1	45·1	86·3	56·3
7 ...	48 inches Steel Main at Kilpauk.	Junction of Greenway's Road and Brodie's Road, Adyar.	54·2	24·2	74·1	44·1	86·0	56·0
		SUB-MAINS.						
North Mint Street Branch.	13,759 feet on Main No. 1.	Junction of Basin Bridge Road and Mint Street in Georgetown. Joins Main No. 1.	57·7	23·7	75·6	41·6	86·4	52·4
Rayapuram Branch.	20,169 feet on Main No. 1.	Ibrahimji Saheb Street and North Beach Road in Tondiarpet.	48·1	17·1	71·3	40·3	85·3	55·3
Tiruvattiyur High Road Branch.	20,169 feet on Main No. 1.	Junction of Tiruvattiyur High Road and Gumalamman Kovil Street, Tondiarpet. Joins Main No 1.	48·6	14·6	71·5	37·5	85·4	51·4
Perambur Branch ...	4,300 feet on Main No. 2.	Madavaram Road in Perambur ...	53·4	17·4	73·7	37·7	85·9	49·9
Vyasarpadi Branch.	8,760 feet on Main No. 2.	Gantz Road in Vyasarpadi	51·6	19·6	72·9	40·9	85·7	53·7
Chintadripet Branch.	5,120 feet on Main No. 4.	Junction of Mount Road near Government House, Chintadripet.	44·3	16·3	69·6	41·6	84·9	56·9
Marshall's Road Branch.	5,120 feet on Main No. 4.	Junction of Pycroft's Road and Westcott's Road.	56·6	18·6	75·1	37·1	86·3	48·3
Ice House Road Branch.	13,100 feet on Main No. 7.	Junction of Barber's Bridge Road and Irusappa Gramany Street in Mylapore.	55·7	22·7	74·7	41·7	86·2	53·2
North Mylapore Branch.	19,900 feet on Main No. 7.	Junction of Cutcherry Road and Mundakunniamman Kovil Street, Mylapore.	49·9	9·9	72·1	32·1	85·5	45·5
Cutcherry Road Branch.	22,600 feet on Main No. 7.	Junction of St. Thomé High Road and Cutcherry Road, Mylapore.	48·3	6·3	71·5	29·5	85·4	43·4

Note.—The figures in the "Hydraulic level" column refer to levels in feet above a datum 20 feet below Mean Sea Level, when the tank is half full. When the tank is full the head would be increased by 14 feet throughout.

From the above table it will be seen that at the average supply rate of 25 gallons per head per day, the approximate head above ground level at the ends of the mains will not be less than 50 feet.

The arrangement of the existing and proposed pipes is shown in detail on Drawing No. 62, on which the existing mains that are to be retained are shown in green, while those existing pipes that are to be taken up, are shown in green scored out with red lines. The proposed new mains are shown in red. The existing valves are shown by two short parallel green lines at right angles to the line representing the pipes on which they are fixed. New valves are shown by two short parallel red lines across the mains upon which they are to be fixed. In every case there is a figure placed alongside the pipe line which gives its diameter in inches—a green figure gives the diameter in inches of an existing pipe, a red figure gives the diameter of a proposed new pipe. From this plan it will be seen that practically every road in the built-up area is supplied with a pipe. The following table gives a statement of the existing pipes, the pipes to be removed, the existing pipes to be retained, the new pipes to be laid and the total length of pipes in the new scheme as it will be when completed :—

Statement of Pipes included in the Proposed New Distribution Scheme.

Diameter of Pipes.	Existing Pipes.	Pipes to be removed.	Pipes to be retained in Scheme.	New Pipes to be laid.	Pipes to be relaid.	Total length of Pipes when the Scheme is complete.
inches.	feet.	feet.	feet.	feet.	feet.	feet.
1¼	1,160	1,160	...	...	...	...
1½	2,850	2,850	...	...	...	...
1¾	6,640	6,640	...	...	...	...
2	180,580	180,580	...	...	...	...
2½	76,120	76,120	...	...	...	...
3	135,570	24,370	111,200	...	...	111,200
4	155,300	5,500	149,800	536,410	2,750	688,960
5	35,550	1,750	33,800	26,370	880	61,050
6	61,170	4,800	56,370	11,808	2,400	70,578
7	81,130	1,750	79,380	18,060	880	98,320
8	9,310	...	9,310	3,265	...	12,575
9	13,440	1,750	11,690	5,270	880	17,840
10	26,280	...	26,280	8,300	...	34,580
12	23,360	...	23,360	12,750	...	36,110
14	24,570	245	24,325	3,160	220	27,705
15	300	...	300	...	...	300
16	8,900	5,605	3,295	3,755	5,045	12,095
18	25,250	7,250	18,000	9,495	6,525	34,020
20	2,170	...	2,170	5,610	...	7,780
21	8,650	...	8,650	...	...	8,650
22	3,700	...	3,700	...	...	3,700
24	4,160	...	4,160	3,700	...	7,860
27	11,750	...	11,750	11,975	...	23,725
30	1,300	...	1,300	14,795	...	16,095
33	...	...	...	300	...	300
36	3,750	...	3,750	6,110	...	9,860
42	4,200	...	4,200	13,759	...	17,959
Totals in Feet.	907,160	320,370	586,790	694,892	19,580	1,301,262
Totals in Miles.	172	61	111	132	4	247

These lengths are exclusive of the proposed new 48-inch steel main which, with its connections to existing mains, will have a total length of 3,230 feet.

Summarised and excluding the 48-inch steel main and connections we have :—

Existing pipes 1¼ to 42 inches	... ...	172 miles.
Pipes to be removed 1¼ to 18 ins., mostly 3 ins. and under		61 ,,
Balance of old pipes to be retained	... ...	111 miles.
Pipes to be relaid 4 to 18 inches ...	... ...	4 ,,
New pipes to be laid 4 to 42 inches	... ...	132 ,,
Total length when the system is complete	...	247 miles.

The following is an abstract of the mileage of roads in Madras and of the pipes which will have been laid when the new Distribution Scheme is completed :—

DESCRIPTION.	Miles.
Roads metalled and unmetalled	270
Roads metalled	194
Pipes when the Scheme has been completed	247
Double line of Pipes	15
Road metalled and unmettalled where Pipes are to be laid	232

From this it will be seen that the mileage of roads in which water distribution pipes will be laid is 38 miles greater than the mileage of metalled roads. Every pucka road with masonry houses will have a pipe. Only paracherries and groups of mud huts will be supplied from public fountains. Allowance has been made in the estimates for laying 10,000 lineal feet of pipes with all necessary valves, etc., to meet any extensions of the system that may appear desirable before the scheme is completed.

Pipe-laying work that should be taken up first.

4. There is a great scarcity of water in Mylapore and Tondiarpet, and, although the Corporation have taken measures to remedy the deficiency in Tondiarpet by installing a 5-inch centrifugal pump driven by an electric motor, yet the supply is still totally inadequate to provide the population of that district with sufficient water to meet their requirements. It is, therefore, highly desirable that the two large Mains—Nos. 1 and 7—leading respectively to Tondiarpet and Mylapore, should be laid before any other pipe-laying work is taken up, and the writer strongly recommends that this work should be put in hand with the least possible delay. In laying the remaining pipes priority should, as far as possible, be given to those districts where the scarcity is most felt, the larger pipes being laid first, and the smaller distributory pipes following as soon as practicable.

Leading mains to encircle divisions.

5. In the scheme proposed every closely built-up district is encircled by mains of at least 6 inches in diameter. This enables most of the small distribution pipes to be fed from both ends and thus increases their carrying capacity.

Rider mains.

6. Large mains should not be tapped for house connections. If house connections are taken off trunk mains or large leading mains by screwing ferrules into them, it will frequently be necessary to close the main for repairs

to ferrules and house connections; also for stopping leakages, tapping the main, etc. For, although, with the appliances now available, there is no difficulty in tapping a main and making connections under pressure, yet house services will be injured from time to time by such causes as the passage of a steam roller over recently excavated cross trenches. To repair such injuries where the houses are connected direct to a large main would necessitate closing the main and interfering with the water-supply of large areas. For this reason, connections to the larger mains should be made only by means of proper junctions commanded by valves, and where water is supplied to the houses of a street in which a large main is laid, a small rider main should be laid parallel to the larger main and connected to it at both ends. Repairs may then be executed and connections made without interfering with the main supply.

In the scheme now proposed, rider mains are provided for all leading mains of 9 inches and over in diameter.

Air valves.

7. The trunk and leading supply mains have been provided at every summit with automatic air release valves, each controlled by a sluice valve. The object of these valves is threefold—

(1) To allow the escape of air when filling the main.

(2) To allow the entrance of air when emptying the main, and thus prevent the possibility of impure sub-soil water or air being sucked in through defective joints on services to houses, public taps, latrines, etc. There are several well known cases of serious pollution through this cause.

(3) To allow the escape of water-borne air which accumulates at summits: if this is not done, the carrying capacity of the main may be much reduced.

Wash-outs.

8. "Wash-outs" fitted with sluice valves have been provided at every depression on trunk and leading mains to allow the pipes to be emptied and cleaned out. They are intended to discharge into water-courses or into the sewers through suitable disconnecting chambers.

On the distribution mains, air valves and wash-outs are not required, for the house connections allow the air to escape, and the hydrants will serve as wash-outs.

Sluice valves.

9. Sluice valves are required for the following purposes:—

(1) To regulate the rate of supply.

(2) To isolate sections of the distribution scheme to allow repairs of mains, etc.

(3) To enable waste detection to be readily carried out.

(4) To concentrate the water-supply on to any particular area in case of fires.

The arrangement of valves proposed for Madras is shown on Drawing No. 46. The system has been designed to enable waste detection to be carried out readily, to render it an easy matter to regulate the rate of supply, to concentrate water on to any particular district in case of fire, and to isolate sections for repairs without interfering with the supply of adjacent areas.

The area of the waterway at the valves on all large mains has been reduced as shown in the following table :—

Diameter of Main.	Diameter of Valve.
inches.	inches.
42 to 36	24
33 to 24	18
22 to 12	12
12 and below.	Same diameter as Main.

The details of the reducing pipes and of the small valve pits enclosing the valves are shown on Drawings Nos. 49—51. By adopting the reduction shown in the above table, the following advantages are obtained at the sacrifice of but a small amount of head :—

(1) The cost of the valves is greatly reduced. For instance, a 42-inch valve and pit would cost Rs. 1,430, whereas a 24-inch valve and pit costs only Rs. 630, so that there is a saving of Rs. 800 on every 42-inch valve which is replaced by 24-inch valve.

(2) The depth at which the mains have to be laid is considerably reduced, and there is consequently a saving in cost in main-laying.

(3) Bye-passes are unnecessary. With large valves, bye-passes are required to enable the valve to be easily opened, the bye-pass is opened before, and closed after the main valve, so that the pressure on both sides of the main valve is more or less equalised and the opening and closing are made easy. By using only small valves, bye-passes are rendered unnecessary in Madras, where that the pressure is comparatively low.

(4) All valves above 18 inches in diameter will be provided with spur wheel gear to ensure ease of manipulation and the slow opening and closing of the valves, which are necessary to prevent damage through "water-ram," caused by sudden changes of motion in large columns of water. By reducing the mains in diameter at the valves, the number of such valves requiring gearing is greatly reduced.

Thus, by reducing the diameters of large pipes at valves, as proposed, considerable economy is obtained in the cost of the valves and in excavation, while in operating the system, the smaller valves will be much easier to manipulate.

Venturi meters.

10. At the head of each of the seven principal mains will be placed a Venturi meter. Each Venturi meter will be supplied with a combined counter and diagram recorder which will be placed in a recorder house. The recorder will be provided with a drum driven by an eight-day clock, and to the drum will be attached a fresh diagram every week, so that the rate of water flowing through the main will be continuously recorded. An examination of the diagrams will at once reveal whether the quantity of water passing through the

main is excessive. These meters may be termed "bulk" meters, inasmuch as they measure in bulk the water supplied to each principal main, this water being accounted for in detail by the "district" meters. Should the quantity of water flowing through any main prove excessive at any time, then each district supplied by that main will be investigated separately until the source of loss is discovered. These meters will be of considerable assistance to the more detailed waste detecting water meter system already described in Section VI.

Hatch-boxes.

11. It is very desirable to be able to examine and clean large pipes without the great inconvenience and expense which accompanies the cutting of large mains. On this account it is proposed to fix manhole pipes, or "hatch-boxes," on all new mains of greater diameter than 11 inches. The hatch-boxes will be placed about half a mile apart.

Cast-iron pipe joints.

12. After very careful consideration, the writer has come to the conclusion that only socket and spigot joints run with lead should be used in the Distribution System. In many cases—probably in most cases—in this Presidency turned and bored joints have been used with considerable success. The advantages of such joints are that the pipes are more easily and quickly laid than pipes with plain joints. They appear to give satisfactory service in mofussil towns where the pressure is low, and where the roads are not disturbed for laying sewers and other purposes, but in Madras City where, in the built-up areas, sewers will shortly be laid under every road of importance, and where the water pressure is to be increased, the advantages are, in the writer's opinion, more than counterbalanced by the following disadvantages:—

(1) With turned and bored pipes, the joint is rigid and allows no deviation from a straight line. Consequently they are difficult to lay in a town like Madras, where it is frequently necessary to deviate from a straight line in order to follow crooked streets and to avoid obstacles such as culverts, sewers, manholes, house connections, etc. With turned and bored pipes bends are required wherever such a deviation from a straight line is necessary. Unless the bend is of exactly the correct angle it has to be cut and a lead collar joint introduced. In the case of plain joints a considerable change of direction can be effected without any bends.

(2) In case of turned and bored joints any settlement due to excavation for sewers, etc., results either in fracture or drawing of the joint. In both cases the result is leakage. With plain joints the pipes can accommodate themselves to slight settlement without leakage. This defect in turned and bored joints has often been found to be very serious, for instance, the laying of a sewer in a street where a water main with turned and bored joints already existed, has frequently resulted in great leakage from the water pipes, which in some cases has necessitated taking up the entire water main, and replacing it by pipes with ordinary socket and spigot joints caulked with lead. Glasgow may be mentioned as a city where, within the last few years, a comparatively large

expenditure has been incurred in taking up turned and bored pipes and replacing them with pipes with plain joints.

(3) With turned and bored joints, if caulked with lead, contraction cannot take place without deformation of the lead owing to the drawing of the joint. In the case of expansion, sockets are likely to be split by wedge action. To allow of expansion and contraction without damage, 10 per cent. of pipes with turned spigots and plain sockets and 10 per cent. of plain spigots and bored sockets have to be introduced into the pipe line, and these have to be laid at regular intervals. There is usually considerable trouble to ensure that these special pipes shall be laid in their proper position.

Taking all these considerations into account, the writer, as already stated, has come to the conclusion that only plain socket and spigot joints caulked with gasket and lead should be used in the new Distribution System. The use of such joints is practically universal througout Europe and America where turned and bored joints for pipes carrying water are now almost wholly confined to temporary work.

Hydrants.

13. In the fully built-up areas, hydrants will be fixed at all street intersections, and where required, additional hydrants will be added so as to limit the distance between adjacent hydrants to 300 feet. In fixing the exact position in which each hydrant should be placed, a careful examination of the neighbourhood will be made and the position will be chosen with a view to facilitate the getting of water to important buildings in case of fire. The rule by which hydrants will be placed at every street intersection will render it accessible from four directions.

It is proposed to use sluice valve hydrants with posts extending about 3 feet above the ground level. The sluice valve hydrant is preferred to any other type, because it is easily kept water-tight and does not admit impurities into Distribution System. It is also more suitable for passing large quantities of water than either the screw-down or ball hydrant, because it gives a clear waterway equal to the full diameter of the pipe. With ball hydrants, there is always the possibility of road washings and other impurities entering the main when the ball is dropped. An example of the evils which may result from this cause was afforded a few years ago at Edinburgh, where the whole Water Distribution System became infested with animal organisms, which had found their way into the pipes through ball hydrants. The post hydrant is preferred to the flush hydrant, in which the valve and nozzle are below ground, because post hydrants are much more readily found and more conveniently operated. The flush hydrant, which is the only type now used in Madras, gets covered with the earth and dust which accumulate on the side of the roads and consequently it is difficult to find when required for extinguishing fires. The flush type will be used in the new system only where congestion of traffic makes post hydrants impracticable.

Public fountains. Self-closing taps.

14. Public fountains are required in Madras to provide water for the floating population and also to supply paracherries, mud huts, and other dwellings that will not be provided with separate connections. There are now in

Madras a number of such fountains where any day water may be seen running to waste with the tap full open. To prevent such waste, it is most important that all existing fountains, and any new ones that may be fixed, should be provided with self-closing taps. There are a number of taps on the market in which automatic closing is effected either by a weight or by means of a spring. The type which is closed by means of a weight, such as that manufactured by Messrs. Glenfield & Kennedy, has an advantage over the type worked by spring because it is less likely to get out of order Another form of tap which should act as a protection against the waste of water is that manufactured by Messrs. Taylor & Sons in which, even if the tap handle is held in the open position, only a limited quantity of water, about 3 gallons, can be drawn. In order to draw more, the handle has to be actuated afresh. The advantage of this kind of tap is that, should the handle of the tap be fastened in the open position, water will not run to waste. This latter type has been largely used by the Bombay Improvement Trust and others who report highly upon its usefulness. The writer recommends that two-dozen of this and two-dozen of the ordinary self-closing taps should be obtained and fixed to the existing fountains and carefully watched to ascertain which type gives the best results. As soon as a decision can be arrived at, all public fountains should be fitted with the type selected.

15. The following fountains are provided for in the estimates :— **Fountains and sewer flushing.**

100 Pillar Fountains.
300 Single Wall Tap Fountains.
200 Double Wall Tap Fountains.

Whenever possible waste water from public taps will be utilized for flushing latrines and sewers, and in fixing fountains the positions will be chosen with this end in view.

No separate allowance has been made for washing places and fountains connected with flush-out latrines, or with sewer flushing tanks. Any used in this way will be charged against the fountains estimate of Rs. 88,550, and the number of fountains unconnected with flushing arrangements will be correspondingly decreased. Drawing Nos. 44 and 46 show the method of utilising the waste-water from fountains for flushing latrines and sewers. Estimates of the cost of these arrangements are given on pages 276 to 278.

16. A question of some interest is the practicability of utilising the present unfiltered supply for road watering, sewer flushing, and such industries as do not require filtered water. **Use of unfiltered water.**

Some of the considerations which have to be taken into account are—

(1) The sufficiency of the new filtered water-supply to meet all requirements.

(2) The demand that will exist for an unfiltered supply.

(3) The financial gain or loss to the Corporation.

Considering these in order—

(1) As already pointed out, it is probable that water waste will have to be restricted in every way possible, if the supply is to be sufficient to provide a constant supply for many years.

(2) If unfiltered water can be supplied at a lower cost than filtered water, it will be in demand for—

(*a*) *Sewer Flushing.*—It will not be possible to say exactly how much will be required for this purpose until the redesign of the sewerage scheme has been completed, but it may be estimated roughly at some 500,000 gallons per day, exclusive of such flushing water as will be provided by the waste from drinking public taps, fountains, etc.

(*b*) *Road Watering.*—The Engineer estimates the present consumption for this purpose at 250,000 gallons per day.

(*c*) *Industrial Purposes.*—Here again only a rough estimate can be made. From an examination of the Meter Register, the writer estimates that about 600,000 gallons per day may be taken as a rough approximation of the water used for industrial purposes.

Demand for unfiltered water.

17. For all purposes, the demand for unfiltered water may therefore be taken roughly as—

(*a*) Sewer Flushing ...	500,000	gallons per day.
(*b*) Road Watering ...	250,000	,, ,,
(*c*) Industrial Purposes ...	600,000	,, ,,
Total ...	1,350,000	gallons per day.

At 25-gallon per head this quantity would supply a population of 54,000 or some 10 per cent. of the present population.

It is not likely to be worth while to lay down any great length of distributing mains for this quantity.

It may, however, be economical in certain cases to supply unfiltered water to large consumers. For instance, the following figures give the quantities of water used per month by three companies whose works are close together :—

The Carnatic Mill Co.	...3,558,900	gallons.
The Buckingham Mill Co.	...4,290,200	,,
The Loco. & Carriage Goods Shed, M.R.Co.	... 286,500	,,
Total...	8,135,600	gallons.

The cost of pumping and filtering, at two annas per thousand gallons, for these three companies would amount to Rs. 12,203 per annum.

In order to ascertain whether or not there would be a demand for unfiltered water in these cases, letters were addressed to the Carnatic & Buckingham Mills Co's and to the Madras & Southern Mahratta Railway Co.

The Mill Companies replied in identical terms as follows :—

"The water as supplied now is suitable for most of our purposes. We have to precipitate a part of it, because of the iron it contains, but this is only a small portion. In brief, we would prefer the water as it is at the price to paying more for it filtered."

The Railway Co. write as follows :—

"As the bulk of the water supplied to this Railway in Madras is for locomotive use, this is not required to be filtered."

In these circumstances it is proposed to retain for a while the connection between the open channel and the existing 16-inch main which supplies the Perambur district. Through this main it will be possible to supply the Buckingham and Carnatic Mills with unfiltered water, or should it prove advisable, the main may be used for filtered water only, and the use of unfiltered water entirely discontinued. In any case, to prevent stagnation in the delivery channel, unfiltered water may be supplied through the 16-inch main until the new conduit has been in successful operation for some months, and until it has been decided what to do with the channel.

As far as can be judged at present it appears unlikely that it will be worthwhile to provide an unfiltered supply.

SECTION VIII.

MADRAS CITY MUNICIPAL ACT.

---

1. Madras City Municipal Act of 1904 requires revision. 2. Standard regulations required to ensure uniformity of practice in Madras Presidency. 3. Provision of supply of drinking water by Corporation. 4. Fire hydrants to be provided. 5. Supply of water for domestic purposes. 6. President may in certain cases require owners to obtain private water-supply. 7. Making and renewing connections with Municipal waterworks. 8. President may take charge of private connections. 9. Power of President to alter position of connections. 10. Provisions as to storage cisterns and other fittings, etc., to be used for connections with waterworks. 11. Supply of water for other than domestic purposes. 12. Obligation of owner or occupier to give notice of waste of water. 13. Penalty for destroying valves, etc. Obligation to give notice of waste, etc. 14. Power of Corporation Engineer to enter houses to inspect, &c. 15. Where several houses supplied by one pipe each to pay. 16. Penalty for allowing persons to use the Corporation water. 17. Penalty for taking the Corporation water without agreement. 18. Power to let meters, etc., for hire. 19. Power to ascertain quantity consumed by meter, and remove meters, etc. 20. Power to cut off water in certain cases. 21. Penalty for application of water contrary to agreement. 22. Penalty for extension or alteration of pipes. 23. Cutting off of supply to premises. 24. Fencing of supply channel. 25. Trespass on land where conduit runs or premises connected with supply. 26. Procedure if name and address of trespasser unknown. 27. Construction of waterworks. 28. Vesting of waterworks in Corporation. 29. Powers of Corporation in executing works without City. 30. Jurisdiction of Magistrate without City in respect of such works. 31. Power of President in respect of laying pipes. 32. Notice and compensation to owner of property affected. 33. Prohibition against damage to works. 34. Prohibition against opening or removal of lock, cock or pipe. 35. Power of Corporation to make Bye-laws.

Madras City Municipal Act of 1904 requires revision.

1. Before formulating a set of Waterworks Bye-laws, it is necessary first to consider what provisions are contained in the Corporation Act, and what amendments are required to ensure that the Corporation shall have proper powers to enforce a suitable code of Bye-laws.

There is no doubt that the Madras City Municipal Act of 1904 needs revision in the sections that deal with Water and Drainage Works. In making any such revision however, attention must be directed to any Act of the Local Government or of the Government of India now in force or likely to be promulgated, for example a Public Health Act for India somewhat of the nature of the English Public Health Acts. The writer is not aware of any intention on the part of the Government of India to put forward such a measure, but, in view of the great advances that are now taking place in sanitation in this country, some such Act is highly desirable in order to ensure uniform practice throughout the whole of India.

Standard regulations required to ensure uniformity of practice in Madras Presidency.

2. Should the Government of India have no legislation in view, it naturally devolves on the Local Government to take such action as will standardize practice in the Madras Presidency so far as local variations in conditions may allow, and, as far as possible, to extend to all Municipal authorities the same powers in regard to the making and enforcing of Bye-laws and Regulations.

The writer ventures to trust that these considerations will be borne in mind when dealing with the amendment of the Municipal Act and with the Code of Water-supply Bye-laws proposed in this Report. Water and Drainage Works are being undertaken by all the most important towns in South India, and it will be a very great advantage, not only to the inhabitants, but also to Architects, Engineers, Builders and Plumbers, if an authoritative standard can be established before first-class sanitary fittings come to be installed. In Madras City a considerable demand for first-class work already exists in connection with hospitals, hotels, and other large buildings, and a complete set of Bye-laws is urgently required in order that house-owners and business firms may know what class of work will be required by the Corporation.

In addition to Waterworks Bye-laws, Drainage Bye-laws are also being framed by the writer, but have not yet been completed. In what follows only Waterworks Bye-laws are dealt with. It is not expected that either the Bye-laws or the amendments to the Act will be accepted in their entirety as here proposed, but it is believed that they will be found sufficiently complete to serve as a basis for discussion.

The clauses of the Act dealing with Water-supply and Drainage require so much revision that it may be well to re-draft them entirely. The writer, however, has contented himself by indicating what additions and amendments appear to him desirable; the re-writing of the clauses can be done after the full consideration which this subject will doubtless receive from the Corporation and Government.

While some of the new clauses are original, others have been extracted from the Bombay Municipal Act and the English Public Health and Waterworks Clauses Acts. The Bombay Act is greatly superior to the Madras Act as regards its Waterworks and Drainage Clauses, but the writer is informed that it is out of print, and unfortunately during the writing of this section, he was able to borrow a copy for a few days only.

Extract from Madras City Municipal Act, 1904, giving the Powers and Duties of the Corporation in respect of supply of water, together with amendments and additions proposed by the Special Engineer.

Provision of supply of drinking water by Corporation.

3. SECTION 192. (1) The Corporation shall provide a supply of wholesome drinking water within the City, and shall cause such mains, pipes and taps to be laid and provided therein, and such tanks, reservoirs, engines, or other works to be constructed and maintained either within or without the City as are necessary for the said purpose; and shall erect sufficient stand-pipes, fountains or other conveniences for the gratuitous supply of water.

PROPOSED ADDITION.

Water carried away from any work provided for the gratuitous supply of water shall be taken only for private use and not for sale, and shall not, except with the written permission of the President, be carried away in any vessel of a capacity exceeding three gallons. No hose pipe, pipe, tube, shoot or any other contrivance for taking away water shall be attached to or connected with any public tap or fountain.

(2) Such conveniences shall be so placed within the populous parts of the City that there shall be one at a distance not exceeding one hundred and fifty yards measured in a direct line from any house in any public street.

This paragraph may be omitted altogether. It is unnecessary now that a separate service is given to every masonry house.

(3) The Corporation shall, as far as possible, make adequate provision that such supply is continuous throughout the year, and that the water is at all times pure and fit for human consumption.

PROPOSED ADDITIONAL PARAGRAPH.

4. **The Corporation shall cause fire-hydrants and all necessary works machinery and assistance for supplying water in case of fire to be provided and maintained; and shall have painted or marked on the buildings and walls or in some other conspicuous manner, within the streets, words or marks near to such hydrants to denote the situation thereof, and shall cause a hydrant-key to be deposited at each place within the city where a Municipal fire-engine is kept, and do such other things for the purpose aforesaid as they shall deem expedient.** **Fire-hydrants to be provided.**

5. SECTION 193. (1) The President may, on application by the owner or occupier of any *masonry* building, *renting at Rs. 5 or more per mensem,* arrange for supplying water to the same for domestic purposes in such quantities as the President deems reasonable, and may at any time limit the amount of water to be so supplied whenever he considers it necessary. **Supply of water for domestic purposes.**

It is proposed to add the words printed in italics above, and also the following :

PROPOSED ADDITIONAL PARAGRAPHS.

Two classes of domestic services will be provided :—

A First-class Service **for which the consumer will be required to hire water meters from the Corporation, to adopt only specified fittings, and to secure approval of position of pipes and fittings. All water consumed in excess of a maximum allowance will have to be paid for by the consumer. The maximum free allowance and the charge for excess water will be determined from time to time by the Standing Committee.**

A Second-class Service **in which the consumer will be allowed to fix a limited number of taps of approved pattern provided they are placed in such positions approved by the President that they can at all times be readily inspected by the Municipal staff.**

The President may at his discretion fix a meter to any service pipe, whenever and for such length of time as he may consider necessary. The cost of fixing and removing such meter shall be paid by the owner or occupier, who shall also pay to the Corporation rent for the meter at such rates as from time to time may be fixed by the Corporation.

(2) The works necessary for such supply and any repair, extension or alteration of the same shall be carried out by the President, and the expense thereof shall be defrayed by the owner or occupier.

(3) No additional tax shall be payable in respect of such supply.

These two paragraphs 193 (2) and (3) may be omitted in view of proposed additional clauses given below.

Explanation.—A supply of water for domestic purposes shall not be deemed to include a supply—

(*a*) for animals or for washing vehicles, where such animals or vehicles are kept for sale or hire,

(*b*) for any trade, manufacture or business,

(*c*) for fountains, swimming baths, or for any ornamental or mechanical purpose,

(*d*) for gardens or for purposes of irrigation,

(*e*) for watering streets,

(*f*) for flushing purposes,

(*g*) for building purposes.

PROPOSED ADDITIONAL SECTIONS.

President may in certain cases require owners to obtain private water-supply.

6. If it shall appear to the President that any premises, within any portion of the area of supply and so situated that the nearest point of the boundary of the premises is within 100 feet from a Corporation water pipe, are without a proper supply of pure water, the President may, by written notice, require the owner of the said premises, or the person primarily liable for the payment of property-taxes thereon, to obtain a supply from a Municipal waterwork adequate to the requirements of the persons usually occupying or employed upon the said premises, and to provide communication-pipes and do all such works as may be necessary for that purpose.

Making and renewing connections with Municipal waterworks.

7. (1) No connection with any Municipal waterwork shall be made or renewed—

(*a*) except by a Municipal officer or servant empowered in that behalf by the President; and

(*b*) until the certificate specified in sub-section (4) has been given.

(2) In every case where a new connection with a Municipal waterwork is made or an existing connection requires renewal, all necessary communication-pipes and fittings, from and including the ferrule on the supply main up to and including the stop-cock nearest the supply main, shall be supplied by the Corporation, and the work of laying and applying such communication-pipes and fittings shall be executed by Municipal agency through the medium of a contractor or otherwise under the President's orders; but the cost of making or renewing any such connection, and of all communication-pipes and fittings so supplied, and of all work so executed, shall be paid by the person on whose application or for whose premises the connection is made or renewed.

(3) Every such new connection or renewed connection with its communication-pipes and fittings up to and including its stop-cock as aforesaid shall thereafter vest in the Corporation and be maintained at the charge of the Municipal fund as a Municipal waterwork.

(4) All communication-pipes and fittings beyond the said stop-cock shall be laid and applied under the supervision of a Municipal officer appointed by the President in that behalf, who shall give and sign a certificate, free of charge, when such communication-pipes and all necessary fittings and work have been laid, applied, executed in a satisfactory manner and found satisfactory under test and when proper and sufficient arrangements have been made for draining off waste-water.

(5) Where any communication-pipe or fitting is laid, applied, added to or altered, or any connection is made in contravention of this section, the President may remove such communication-pipe, fitting or connection, and make good such waterwork; and the expenses incurred by him in so doing shall be paid by the owner or occupier of the premises in which or for supply to which such communication-pipe or fitting has been laid, applied, added to or altered, or such connection has been made.

8. The President may, if he thinks fit, take charge on behalf of the Corporation of all communication-pipes and fittings of any existing private service connected with any Municipal waterwork up to and including the stop-cock nearest the supply main for the said service, and the same shall thereafter vest in, and be maintained at the expense of, the Corporation as a Municipal waterwork. **President may take charge of private connections.**

9. The President may, if at any time he deems it expedient to alter the position of an existing connection with any Municipal waterwork, or of the communication-pipes or fittings thereof, and after giving to the owner of such communication-pipes or fittings not less than forty-eight hours' previous notice of his intention so to do, cause the said connection to be moved to such other position as he thinks fit, and cause any or all of the said communication-pipes and fittings to be relaid and applied, or others to be laid and applied, in lieu thereof, in such position as he may direct: and in every such case such removal and alteration shall be carried out at the expense of the Municipal fund and the new connection, with its communication-pipes and fittings up to and including the stop-cock nearest the supply main, shall thereafter vest in the Corporation and be maintained at the charge of the Municipal fund as a Municipal waterwork. **Power of President to alter position of connections.**

10. (1) The President may, whenever it shall appear to him to be necessary, by written notice require that any premises furnished with a private water-supply from any Municipal waterwork shall, within a reasonable period, which shall be prescribed in the said notice, be provided with a storage cistern of such size material, quality and description, and with such fittings and placed in such position as he thinks fit. **Provisions as to storage cisterns and other fittings, etc., to be used for connections with waterworks.**

(2) The President shall also from time to time prescribe the number, size material, quality, description and position of the pipes, taps, cocks and other fittings to be employed for the purposes of any connection with, or of any connection from, any Municipal waterwork, and no such connection or communication shall be made by any person otherwise than as so prescribed.

11. SECTION 194. (1) The President may, at his discretion, supply water for any purpose other than a domestic purpose, on receiving a written application specifying the purpose for which such supply is required and the quantity likely to be consumed. **Supply of water for other than domestic purposes.**

(2) For all water supplied under sub-section (1) payment shall be made at such rate as may be prescribed by the Standing Committee.

(3) When any application under sub-section (1) is received, the President may, subject to such charges or rates as may have been fixed by the Standing Committee, place, or allow to be placed, the necessary service-pipes, taps and works (including water-meters) of such dimensions and character as may be fixed by the President and may arrange for the supply of water through such pipes, taps, works and meters.

PROPOSED ADDITIONAL SUB-SECTION (4).

The Corporation shall not be liable, in the absence of express stipulation, under any agreement for the supply of water for other than domestic purposes, to any penalty or damages for not supplying such water, if the want of such supply arises from unusual drought, or other unavoidable cause or accident.

Obligation of owner or occupier to give notice of waste of water.

12. SECTION 195. Any owner or occupier of any building or land, in or on which water supplied under this Act is misused from negligence or other circumstances under his control, or used in excess of the quantity fixed under Section 193 or the last preceding section, or in which the pipes, mains or other works are out of repair to such an extent as to cause waste of water, shall, if he has knowledge thereof, be bound to give notice of the same to the President.

PROPOSED CLAUSE TO REPLACE SECTION 195 ABOVE.

Penalty for destroying valves, etc. Obligation to give notice of waste, etc.

13 **Every person who shall break, injure, or open any lock, cock, valve, pipe, work, or engine belonging to the Corporation, or shall flush or draw off the water from the reservoirs or other works of the Corporation, or shall cause or suffer any pipe, meter, valve, cock, cistern, bath, soil-pan, water-closet or other apparatus or recepatcle to be out of repair, or to be so used or contrived as, that the water supplied to him by the Corporation is or is likely to be wasted, misused, unduly consumed or contaminated, or so as to occasion or allow the return of foul air, or other noisome or impure matter, into any pipe belonging to or connected with the pipes of the Corporation, he shall for every such offence be liable to a penalty not exceeding Fifty Rupees.**

PROPOSED NEW SECTIONS.

Power of Corporation Engineer to enter houses to inspect, etc.

14. **The Engineer or any other person acting under the authority of the Corporation may, between the hours of nine o'clock in the forenoon and four o'clock in the afternoon, enter into any house or premises supplied with water by virtue of this or other Act of the Corporation, in order to examine if there be any waste or misuse of such water, and if such Engineer or other person at any such time be refused admittance into such dwelling-house or premises for the purpose aforesaid, or be prevented from making such examination as aforesaid, the President may turn off the water supplied by the Corporation from such house or other premises.**

Where several houses supplied by one pipe each to pay.

15. **When several houses or parts of houses in the separate occupation of several persons are supplied by one common pipe, the several owners or occupiers of such houses or parts of houses shall be liable to the payment of the same rates for the supply of water as they would have been liable to if each of such several houses or parts of houses had been supplied with water from the works of the Corporation by a separate pipe.**

16. Every owner or occupier of any tenement supplied with water under this or other Act of the Corporation who shall supply to any other person or permit him to take any such water from any cistern or pipe in such tenement, unless for the purpose of extinguishing any fire, or unless he be a person supplied with water by the Corporation, and the pipes belonging to him be, without his default, out of repair, shall forfeit to the Corporation for every such offence a sum not exceeding Fifty Rupees. Penalty for allowing persons to use the Corporation water.

17. Every person who not having agreed to be supplied with water by the Corporation shall take any water from any reservoir, water-course, or conduit belonging to the Corporation, or any pipe leading to any reservoir, water-course, or conduit, or from any cistern, pipe, hydrant or other waterworks containing water belonging to the Corporation other than such as may have been provided for the gratuitous use of the public shall forfeit to the Corporation for every such offence a sum not exceeding One Hundred Rupees. Penalty for taking the Corporation water without agreement.

18. Where the Corporation supply water by measure, the President shall let for hire to all consumers of water so supplied any meter or instrument for measuring the quantity of water supplied and consumed, and any pipes and apparatus for the conveyance, reception, or storage of the water, for such remuneration in money as may from time to time be fixed by the Standing Committee, which shall be recoverable in the same manner as rates due to the Corporation for water: and the meters, instruments, pipes, and apparatus shall not be subject to distress for rent of the premises where the same are used, or be attached or taken in execution under any process of any Court or law or equity, or under or in pursuance of any adjudication or order in bankruptcy, or other legal proceeding against or affecting the consumer of the water or the occupier of the premises, or other the person in whose possession the meters, instruments, pipes and apparatus may be. Power to let meters, etc., for hire.

19. The officers of the Corporation may enter any house, building, or lands to, through, or into which water is supplied by them by measure, in order to inspect the meters, instruments, pipes and apparatus, for the measuring, conveyance, reception or storage of water, or for the purpose of ascertaining the quantity of water supplied or consumed, and may from time to time enter any house, building, or lands for the purpose of removing any meter, instrument, pipe, or apparatus the property of the Corporation: and if any person hinders any such officer from entering or making such inspection, or effecting such removal, he shall for every such offence be liable to a penalty not exceeding Fifty Rupees; but, except with the written consent of the President, this power of entry shall be exercised only between the hours of 10 in the forenoon and 4 in the afternoon. Power to ascertain quantity consumed by meter, and remove meters, etc.

20. The President may at any time without giving previous notice cut off the supply of water to any or all districts of the city should he consider necessary for repairs, alterations or additions to the water-supply, or should he consider it imperative for the benefit of the public to do so. In that event the Corporation shall not be liable for any damages that may result from such cutting off of the water-supply. If any person supplied with water by the Corporation does or causes or permits to be done anything in contravention of any of the provisions of this Act, or fails to do anything which, under any of those provisions, ought to Power to cut off water in certain cases.

be done for the prevention of the waste, misuse, undue consumption or contamination of the water of the Corporation, the President may (without prejudice to any remedy against him in respect thereof) cut off any of the pipes by or through which water is supplied by the Corporation to such person, for his use, and may cease to supply him with water, so long as the cause of injury remains or is not remedied.

If any Person—

Penalty for application of water contrary to agreement.

21. First, not having from the Corporation a supply of water for other than domestic purposes, uses for other than domestic purposes, any water supplied to him by the Corporation; or

Secondly, having from the Corporation a supply of water for any other than domestic purposes, uses for any purposes other than those for which he is entitled to use the same, any water supplied to him by the Corporation;

he shall for every such offence be liable to a penalty not exceeding Twenty Rupees, without prejudice to the right of the Corporation to recover from him the value of the water misused.

Penalty for extension or alteration of pipes.

22. It shall not be lawful for the owner or occupier of any premises supplied with water by the Corporation or any consumer of the water of the Corporation, or any other person, to affix or cause or permit to be affixed any pipe or apparatus to a pipe belonging to the Corporation or to a communication or service pipe belonging to or used by such owner, occupier, consumer, or other person, or to make any alteration in any such communication or service pipe, or in any apparatus connected therewith without the consent in every such case of the Corporation, and if any person acts in any respect in contravention of the provisions of the present section, he shall, for every such offence, be liable to a penalty not exceeding Fifty Rupees, without prejudice to the right of the Corporation to recover damages from him in respect of any injury done to their property, and without prejudice to their right to recover from him the value of any water wasted, misused, or unduly consumed.

Cutting off of supply to premises.

23. SECTION 196. If any person whose premises are supplied with water neglects to pay the water and drainage tax, or any sum payable under Section 193 or Section 194, when due, or to give notice as provided in the last preceding section, or negligently misuses or causes waste *or contamination* of water, the President may cut off the supply of water from the said premises.

Note.—It is proposed to substitute "Section 195" in place of "the last preceding section" and to add the words "or contamination" printed in italics above.

Fencing of supply channel.

24. SECTION 197. The Corporation shall make and maintain sufficient fences and boundaries on each side of any channel by which water is brought for the supply of the City.

Note.—Fences have not been constructed, and a covered conduit will shortly replace the existing open channel, therefore Section 197 may be omitted.

Trespass on land where conduit runs or premises connected with supply.

25. SECTION 198. It shall not be lawful for any person except with permission duly given and obtained to enter on land belonging to the Corporation along which the conduit runs, or on any premises connected with the supply.

Procedure if name and address of trespasser unknown.

26. SECTION 199. If any person contravenes the provisions of the last preceding section, and his name and address is unknown, or if there is reason to believe that he will abscond, he may be dealt with under the provisions of Act V of 1898, Section 57 of the Code of Criminal Procedure, 1898.

27. SECTION 200. The President may, with the consent of the Corporation and the sanction of the Local Government, construct filtering tanks, reservoirs, engines, conduits, or other works without the limits of the City for bringing water into the same, and may provide tanks, reservoirs, mains, fountains and other conveniences within the said limits for the use of the inhabitants. Construction of waterworks.

28. SECTION 201. All public tanks, reservoirs, pipes, conduits, and other works (not being the property of the Government) connected with the supply of water to the City, whether made at the cost of the Corporation or otherwise, and all bridges, buildings, engines and other things connected therewith and all land (not being private property or the property of the Government) adjacent and appertaining to the same, shall vest in the Corporation. Vesting of waterworks in Corporation.

29. SECTION 202. If a project for laying pipes or constructing conduits for bringing water into the City from any place beyond the limits of the same has been approved by the Local Government, the Corporation and their officers and servants may, in the execution and for the purposes of the work— Powers of Corporation in executing works without City.

(*a*) exercise throughout the line of country through which such pipes or conduits are to run all the powers which they may exercise under this Act within the City;

(*b*) exercise, with the sanction of the Local Government, like powers over any lake or reservoir from which a supply of water for the use of the City is derived and over all lands at a distance not exceeding one thousand yards beyond the high-water level of such lake or reservoir.

30. SECTION 203. The Magistrate of any district through which such pipe or conduit runs may exercise in respect of the work the same powers and jurisdiction as a Magistrate may under this Act exercise in respect of any work executed by a Municipal authority within the City. Jurisdiction of Magistrate without City in respect of such works.

31. SECTION 204. The President may carry any pipe for the water-supply of the City through, across or under any street or other place, or into or under any building, cellar or vault. Power of President in respect of laying pipes.

32. SECTION 205. The President shall give reasonable notice of his intention to proceed under Section 204 to the owner or occupier of any premises affected by the work, and the President with the sanction of the Standing Committee shall pay compensation to any person who sustains damage by the exercise of such power. Notice and compensation to owner of property affected.

33. SECTION 206. No person shall by any wrongful act break, injure or cause damage to any work connected with the supply of water to the City. Prohibition against damage to works.

34. SECTION 207. It shall not be lawful for any person without due authority to open or remove any lock, cock or pipe, or to draw off or take water from any work, belonging to or under the control of the Corporation. Prohibition against opening or removal of lock, cock or pipe.

Powers of the Corporation to frame Waterworks Bye-laws.

Power of Corporation to make Bye-laws.

35. Having in the preceding paragraphs dealt with the powers and duties in respect of the supply of water conferred upon the Corporation by the Madras Municipal Act, we may now proceed to consider the powers the Corporation to make Bye-laws.

The following extract is taken from the Madras City Municipal Act of 1904 :—

Chapter XXXIX.—Bye-laws and Rules.

BYE-LAWS.

SECTION 409. The Corporation may, and shall, if the Local Government so direct, make Bye-laws, not being inconsistent with the provisions of this Act, to provide for.

* * * * *

(6) the measurement of water supplied for domestic or other purposes, and the use of public tanks, wells, conduits, and other places or works for water-supply, public bathing, washing and the like ;

* * * * *

This clause gives the Corporation only very limited powers to make Bye-laws and, in order to provide more ample provision in this respect, the writer recommends that the Act be amended by substituting for this clause the following :—

(6) (*a*) The use of public tanks, wells, conduits, and other places or works for water-supply, public bathing, washing and the like.

(*b*) The measurement of water supplied for domestic or other purposes. Prevention of waste, undue consumption, misuse, or contamination of water. The size, nature, materials, workmanship and strength, and the mode of arrangement, connection, disconnection, alteration, and repair of pipes, meters, cocks, ferrules, valves, soil-pans, water-closets, baths, cisterns, and other apparatus (in this section referred to as "water fittings") to be used, and forbid any arrangements and the use of any water fittings which may allow or tend to waste, undue consumption, misuse, erroneous measurements, or contamination.

(*c*) In the case of failure of any person to observe such Bye-laws as are for the time being in force, the President may, if he thinks fit, after twenty-four hours' notice in writing enter, and by and under the direction of the duly authorised officers, repair, replace, or alter any water fittings belonging to or used by such person, and not being in accordance with the requirements of such Bye-laws, and the expense of every such repair, replacement, or alteration shall be recoverable by the Corporation as the water and drainage tax in respect of the premises is recoverable.

SECTION IX.

WATERWORKS BYE-LAWS.

---

1. Operation of Bye-laws and Regulations. 2. Definitions. 3. Application for supply. 4. Private water-supply. 5. Connection to Corporation mains. 6. Alteration or removal of consumers' pipes and fittings. 7. Repairs to pipes, fittings, etc. 8. Provisions relating to the prevention of waste, etc., of water. 9. Consumers' pipes and fittings. 10. Material of consumers' pipes. 11. General specification. 12. Lead pipes. 13. Cast-iron pipes. 14. Accessibility of pipes, etc. 15. Wrought-iron and steel tubes. 16. Brass and copper tubes. 17. Consumers' fittings. 18. Taps and cocks. 19. Bath and lavatory fittings. 20. Ball Taps (Croydon Pattern). 21. Supply cisterns. 22. Flushing cisterns. 23. Use of automatic flushing apparatus, Hoses, etc. 24. Hot-water apparatus. 25. Warning Pipes. 26. Testing and Stamping. 27. Method of laying Consumers' Pipes. 28. Premises not to be supplied through more than one supply pipe. 29. Separate supply pipe to every dwelling-house. 30. Position of stop cock. 31. Taps for drinking water. 32. Consumers' outside taps or sand-pipes. 33. Pumps drawing water direct from water-supply pipe. 34. Prohibited connections of consumers' pipes. 35. Certain supplies to be passed through meter. 36. Agreement for meter supplies. 37. Charges for water supplied by meter. 38. Water required for building purposes, etc. 39. Cattle troughs. 40. List of authorised plumbers. 41. Penalties. Schedule A: Application for a supply of water. Schedule B: Agreement for the supply of water by meter. Schedule C: Authorisation of plumbers.

The following Bye-laws have been drawn up on the assumption that the Corporation Act is amended as proposed in Section VIII. The Appendix referred to in the Bye-laws will contain an extract of the Waterworks clauses of the amended Act.

Bye-laws and Regulations for the Prevention of Waste, Contamination or Misuse of Water.

Operation of Bye-laws and Regulations.

1. These Bye-laws and Regulations shall come into operation on the day of 19 , and shall remain in force until amended in accordance with the Madras City Municipal Act, 19 . Notice of such amendment being published in two or more newspapers circulating in the City of Madras.

The Schedules attached hereto and respectively lettered A, B and C, shall be read with and be deemed to form an integral part of these Bye-laws and Regulations.

A person shall not for conveying, delivering, receiving or using the water supplied by the Corporation fix, fit or use any pipe, tap, cock, cistern, hot water apparatus, bath, basin, closet, urinal, meter or fitting which shall not be of good quality or not in accordance with such of the requirements hereinafter set forth as shall be applicable to the circumstances of the case.

Provided that a person shall not be required under these Bye-laws to alter or renew any pipe, fitting, apparatus or thing existing and in use on any premises at the date when these Bye-laws begin to apply to such premises or to construct or provide any addition thereto unless and until such pipe, fitting, apparatus, or thing is so defective or in such condition or position as to cause or be likely to cause waste, undue consumption, misuse or contamination or risk of contamination of the water supplied by the Corporation.

Definitions. 2. In these Bye-laws and Regulations and the Schedules attached thereto the following words shall have the meanings herein defined, namely :—

(*a*) The term "Corporation" shall mean the Corporation of the City of Madras acting as a body corporate under their Common Seal, or by a Committee or by the President of the Corporation, or by any other authorised officer (as hereinafter defined) duly appointed for the purpose.

(*b*) The term "Authorised Officer" shall mean the Corporation Engineer, Out-door Foreman, Inspector, Superintendent, Overseer, or any person appointed by the Corporation for the purpose of administering any of these Bye-laws and Regulations.

(*c*) The term "Consumer" shall mean any corporate body, person or persons supplied or applying to be supplied with or using the water of the Corporation, or any person or persons otherwise liable for the payment of the water rates or rents.

(*d*) The term "Communication Pipe" shall mean the pipe laid by the Corporation from the main up to and including the stop-cock nearest to the main.

(*e*) The term "Service Pipe" shall mean any consumer's pipe which is subject to water pressure from the main of the Corporation.

(*f*) The term "Distributing Pipe" shall mean any consumer's pipe from a cistern or tank which is supplied with water by the Corporation.

(*g*) The term "Stop-cock" shall mean any tap controlling the supply of water of the Corporation to any premises charged or chargeable separately with water-rate or rent.

(*h*) The term "Gun-metal" shall mean an alloy containing not less than 88 per cent. by weight of copper and not less than 8 per cent. by weight of tin, and having a tensile strength of not less than 14 tons per square inch of sectional area.

(*j*) The term "Hard Brass" shall mean a composition of copper and zinc with or without lead or tin, not less than 62 per cent. by weight of the composition being copper and not more than 4 per cent. by weight of being lead and having a tensile strength of not less than 13 tons per square inch of sectional area.

(*k*) The terms "Consumers' Pipes" and "Consumers' Fittings" shall include and refer to all pipes and fittings respectively used in connection with the supply of the water of the Corporation which are not the property of the Corporation.

(*l*) The terms "District of Supply" or "Limits of Supply" shall mean and refer to the area within which the Corporation is empowered to supply water under any General or Special Act, or Provisional Order confirmed by Government.

(*m*) So far as may be reasonably consistent with the definitions herein given, terms used in these Bye-laws and Regulations shall have the same meanings as the same terms have when used in the General and Special Acts or Orders referred to.

Application for supply.

3. Before commencing the laying, alteration, or extension of any consumer's pipe, or otherwise on applying to the Corporation to provide a supply of water to any premises, intending consumers shall fill up and deliver to the Corporation Office an application in the form prescribed in Schedule A attached to these Bye-laws and Regulations (see page 133), or as otherwise required by the Corporation.

Private water-supply.

4. With every application for a private connection there shall be forwarded a deposit of Rs. 5, which sum shall be refunded when the estimated cost of the work is paid, or the application refused, withdrawn or cancelled. Though, if the application is refused, withdrawn or cancelled, the President may deduct from the deposit such sum as may be required to meet any expenses incurred in connection with the application.

Such application shall specify the name of licensed plumber whom it is proposed to employ on the work and shall be signed by the applicant or an agent duly authorised on his behalf.

Note.—No connection will be granted unless proper drainage arrangements have been made and the approval of the Health Officer obtained to the same.

Connection to Corporation mains.

5. Consumers' pipes shall be laid and connected to the mains of the Corporation in accordance with the Clauses of the Corporation Act, 19 , Section (see Appendix, page), and with these Bye-laws and Regulations. The consumer shall at his own cost provide, lay down and maintain all pipes and fittings which may be required within his premises and also lay such length of service pipe beyond the boundary thereof as is required to enable the connection to be made to the main.

No consumer shall be entitled to a supply of water unless and until all his pipes and fittings and the laying and fixing thereof have been approved by the authorised officer of the Corporation as complying with these Bye-laws.

Alteration or removal of consumers' pipes and fittings.

6. No consumers' pipes or fittings shall be removed, altered, or extended except in accordance with the provisions of the Corporation Act, 19 , Section (see Appendix, pages).

Repairs to pipes, fittings, etc.

7. No repairs or alterations to any private connection or fitting connected with a water service shall be executed except by a licensed plumber but no penalty shall be inflicted for temporary repairs to prevent leakage or waste pending report under Clause 195 of the Corporation Act, 19 . In case of such temporary repairs, no report shall be delayed longer than 24 hours.

Note.—The blanks in paragraphs 5, 6, 7 and 8 will be filled in when the Bye-laws are finally drafted.

Provisions relating to the prevention of waste, etc., of water.

8. Every consumer shall be subject to such provisions of the Corporation Act, 19 , as may apply to the prevention of waste, contamination, or misuse of the water of the Corporation, including the access of authorised officers to the consumers' premises, pipes and fittings. (See Appendix, pages).

Consumers' pipes and fittings.

9. All consumers' pipes and fittings shall be provided, and laid at the consumer's cost, and no consumer shall be entitled to a supply of water unless and until such pipes and fittings, and the laying and fixing thereof, are approved by the authorised officer of the Corporation, as complying with these Bye-laws and Regulations.

Material of consumers' pipes.

10. All consumers' pipes shall be of lead, wrought-iron, cast-iron, steel, brass, or copper, as may be required by the Corporation and shall conform in every respect to the following specifications :—

General specification

11. No supply pipe for a "second class" service shall be of a larger bore than ½ inch, except with the written consent of the President.

Where a connection is made between an iron or copper pipe and a lead pipe, a screw ferrule of hard brass shall be wiped on to the lead pipe.

Joints in lead pipes shall be water-tight plumber's or wiped solder joints. No other form of joint, such as copper-bit or flange joints, shall be employed except with the President's permission in writing.

Bends in pipes shall not in any case diminish or alter the bore of the pipes.

Stop taps shall be provided on all primary branches from the supply pipes in buildings with more than one tenancy.

Lead pipes.

12. Lead pipes shall be of equal thickness throughout, and of the following weights per lineal yard :—

Internal diameter of Pipe in inches.	Weight of Pipe in lbs. per lineal yard.
⅜	4 lbs.
½	5 ,,
¾	8 ,,
1	11 ,,
1¼	14 ,,
1½	18 ,,
2	24 ,,

Cast-iron pipes.

13. Cast-iron pipes, if used in connection with water-supply, shall comply with the Standard specification issued by the Corporation.

14. Every pipe or fitting within a building shall so far as practicable be so placed as to be readily accessible for examination and repair, and no pipe shall be embedded in brick, stone, mortar, plaster, or similar materials except where this is unavoidable. **Accessibility of pipes, etc.**

All services shall be so laid as to render impossible any contaminations from drains, latrines, and, if necessary, they shall be laid at a higher level than the house drain.

15. Wrought-iron and steel tubes, if used in connection with water-supply, shall conform to the dimensions given in the following table, and otherwise shall comply with the Standard Specification for Pipe Threads (Publication No. 21) issued by the Engineering Standards Committee :— **Wrought-iron and steel tubes.**

Nominal Bore of Tube in inches.	Approximate Outside diameter of Tube in inches.	Number of Threads per inch.
$\frac{1}{2}$	$\frac{27}{32}$	4
$\frac{3}{4}$	$1\frac{1}{16}$	14
1	$1\frac{11}{32}$	11
$1\frac{1}{4}$	$1\frac{11}{16}$	11
$1\frac{1}{2}$	$1\frac{29}{32}$	11
2	$2\frac{3}{8}$	11

The screws on all tubes shall be conical, having a taper of $\frac{1}{16}''$ on the diameter per inch of length, and in all cases shall be screwed with the British Standard Pipe Threads for Iron or Steel Tubes.

Wrought-iron and Steel Tubes shall not be laid in earth unless properly surrounded with a suitable material to protect them from corrosion.

16. All brass and copper tubes used in connection with water-supply shall be solid drawn, and of a minimum thickness of 14 Imperial Gauge, and shall be screwed with the British Standard Pipe Threads for Iron and Steel Tubes. **Brass and copper tubes.**

17. All consumers' fittings of whatever kind shall conform to the following specifications : - **Consumers' fittings.**

18. Only screw-down or non-concussive taps may be used. Plug, or quick-closing taps of any description, will not be allowed. **Taps and cocks.**

Every tap or cock on a supply pipe shall be made full bore, well dressed and free from sand capable of resisting a pressure of at least 300 lbs. to the square inch. Every tap or cock shall be made of gun-metal or hard brass, or of other not less suitable metal or alloy, and shall be of sufficient strength and weight in every part. Every bib tap or stop-cock shall have an efficient screw-down valve. The valve of a screw-down bib tap and the valve of a screw-down stop-cock, if intended to be used for cold water, shall be faced with specially-prepared leather or other suitable material, and if intended to be used for hot water shall be faced with a material adapted for use for hot water. Such valve, if faced

with a soft washer, shall be so constructed as not to be liable to turn round on its seat, and if faced with vulcanite or other hard material, shall be so constructed as to turn on its seat before tightly closing.

Bath and lavatory fittings.

19. Supply pipes to baths and lavatories taken directly from the supply pipe shall be arranged so that the water may flow in from above.

Overflows to baths and lavatory basins shall, where the water is drawn direct from the supply pipe, be below the water inlet.

All pipes and fittings shall be arranged so as to be readily accessible and, where cased in, the casing shall be provided with a hinged or loose door giving access to the same.

In the case of baths, the overflow pipes shall be carried through the walls to act as "Warning Pipes."

Ball Taps (Croydon Pattern).

20. Ball Taps of the Croydon Pattern shall comply with the following table of dimensions and minimum weights :—

Bore of Shank.	½ inch.	¾ inch.	1 inch.	1¼ inches.	1½ inches.	2 inches.
Breadth and thickness of Lever of Drawn Copper.	$\frac{3}{8}'' \times \frac{1}{4}''$	$\frac{3}{8}'' \times \frac{3}{8}''$	$\frac{3}{8}'' \times \frac{3}{8}''$	$\frac{3}{8}'' \times \frac{1}{2}''$	$\frac{3}{8}'' \times \frac{3}{4}''$	$\frac{3}{8}'' \times 1''$
* Diameter of Round Ball.	4½″	5½″	6″	7″	8″	12″
Weight of Valve, Body and Piston only ...	ozs. 9½	ozs. 14	lbs. 1 ozs. 11	lbs. 2 ozs. 6	lbs. 3 ozs. 5	lbs. 6

The whole of the tap with the exception of the ball and lever shall be of gun-metal. Levers shall be of drawn copper.

Ball Taps shall be stamped to indicate the maximum water pressure under which they are to work.

Silence pipes will not be allowed except by special permission and then they shall be so arranged as to prevent the possibility of siphonage of water from cisterns back again into the supply pipes.

The body of the Ball Tap shall be so fixed as not to become submerged when the level of the water in the cistern is up to the top of the warning pipe.

The size of the orifice in Ball Taps and the size of the ball shall be relative to one another, and adjusted to the pressure.

The Ball Tap shall be securely fixed to the cistern and shall be readily accessible.

Washers for Ball Taps shall be of good quality rubber or other approved material, and enclosed in solid brass caps to prevent them spreading.

* The minimum thickness of the copper used in making the Ball to be 24 Imperial Gauge when finished bright.

21. Lead-lined supply cisterns shall conform in every respect to the specification for lead-lined flushing cisterns given below. — Supply cisterns.

All supply cisterns shall be fixed in such positions as to be readily accessible for clearing and repairs, and shall be provided with dust-proof covers to rigidly exclude all vermin. No supply cistern shall be fixed underground, or in or under a latrine, water-closet or urinal, or in any position where it is liable to contamination of any kind.

Every supply cistern shall be provided with a wash-out plug and warning pipe, and the bottom of the cistern arranged to fall towards the plug.

Where two or more supply cisterns are in communication with each other, the outlet pipes shall be arranged as far as possible so as to secure an equal draught of water from each.

Stop taps shall be provided on the outlet pipes of all supply cisterns as near the cistern as possible.

22. All flushing cisterns shall be provided with a lead plug for stamping. — Flushing cisterns.

In lead-lined or copper-lined flushing cisterns the timber shall be well seasoned, free from sap, and not less than 1 inch thick, ends dove-tailed at corners, and the bottom screwed on. The lead shall weigh not less than 5 lbs. per foot super. The copper shall be not less than 22 Imperial Gauge. The joints shall be braized, or of the kind known as "burned" joints.

Wrought-iron flushing cisterns shall be of a thickness not less than 12 Imperial Gauge.

Cast-iron flushing cisterns shall be not less than ¼ inch thick, with a bead round the top, and shall be efficiently protected against rust.

Earthenware or stoneware cisterns of approved design may be used so long as they comply with these Regulations in other respects.

All flushing cisterns shall be fitted with ball and stop taps, the stop tap in every case being on the supply pipe outside the cistern; the ball taps to be so arranged as to fill the cistern in a period of not less than two minutes. For water-closets the discharge shall not be less than 2½ gallons and not more than 3 gallons except by the President's permission in writing. For urinals the discharge shall not exceed one gallon at each flush for each stall.

The cisterns shall be so made that it is impossible for water to enter whilst the flush is taking place or whilst the pull is drawn down.

Flushing pipes for water-closets shall be fixed as nearly vertical as possible, they shall be not less than 5 feet long, and of a bore not less than 1¼ inches.

23. Except in pursuance of an agreement with the Corporation, a consumer shall not fix, fit, or use upon any premises any self-acting or automatic flushing apparatus through which water of the Corporation is intended to pass unless the water passing through such apparatus shall be supplied through a meter. — Use of automatic flushing apparatus, hoses, etc.

A consumer shall not draw or use water supplied by the Corporation through any hose or movable pipe otherwise than in pursuance of an agreement with the Corporation.

Hot water apparatus.

24. The distributing pipe between any supply cistern and any hot water apparatus shall be connected to the supply cistern at a point not more than 2 inches above the bottom of such cistern, and shall not be connected to any other distributing pipe.

Where any hot water apparatus is connected with the supply cistern, any distributing pipe which is used, or intended or adapted to be used for conveying or delivering cold water for any other purpose, shall be connected to the supply cistern at a point not below one-half the depth of such cistern.

Hot water pipes must be arranged with sufficient provision for expansion, and for the escape of air, and, if of lead, must be supported by a continuous wooden ledge falling towards the boiler. All hot water systems shall be provided with safety valves

Warning pipes.

25. All warning pipe unions shall be not less than ¾ inch bore, screwed to British Standard Pipe Threads, and the warning pipe shall be arranged to discharge in a conspicuous position, but not over the inlet to any drain. On no account shall a warning pipe be connected to any waste pipe, soil pipe or rain-water pipe.

Testing and stamping.

26. Whether so specified or not, all consumers' fittings shall be submitted for approval to the authorised officer of the Corporation before being fixed. All such fittings shall be maintained, repaired, and renewed at the consumer's expense, to the satisfaction of the Corporation or their authorised officer. All consumers' fittings or apparatus used in connection with the water-supply shall be tested and stamped by the Corporation or shall bear the stamp approved by the Corporation as guaranteeing conformity with these Bye-laws and Regulations. All taps and valves shall be capable of sustaining a pressure of 300 lbs. per square inch and all ball cocks a pressure of 150 lbs. per square inch, the ball being not more than half immersed.

Method of laying consumers' pipes.

27. No consumer's pipe laid through an external wall or in the earth shall be less than 2 feet below the surface, nor shall any consumer's pipe or fittings be laid in any position or manner which would involve risk of injury to the pipe or fittings, or waste or contamination of the water. In every case the consumer shall carry out the reasonable requirments of the Corporation or their authorised officer to this end. The position at which the connection of the communication pipe shall be made to the Corporation main shall be fixed by the Corporation.

Whenever a service pipe is laid across a sewer, open drain, or in any other place where, in the opinion of the Engineer, it is liable to injury or to cause contamination to the water, such pipe must be passed through an iron pipe of such length, diameter and thickness as the Engineer considers necessary to afford proper protection, and the pipe shall be laid at such a level as the Engineer may direct.

Premises not to be supplied through more than one supply pipe.

28. No dwelling-house or other premises charged or chargeable separately with water-rate or rent shall be supplied with the water of the Corporation by more than one supply pipe connected to the Corporation main except with the consent in writing of the President of the Corporation.

29. No communication pipe shall be used to supply water to more than one dwelling-house or other premises charged or chargeable separately with water tax or rate, except with the consent in writing of the President of the Corporation. In the event of any such consent being granted, the supply shall remain subject to the provisions of Section of the Corporation Act (see Appendix, page). **Separate supply pipe to every dwelling-house.**

30. An approved screw-down stop-cock, provided by the Corporation at the cost of the consumer, shall be placed in such an accessible position as may be approved by the authorised officer, and, if underground, shall be protected by a proper guard box (or surface box) of approved design. **Position of stop-cock.**

31. In all cases where a constant supply of water is provided by the Corporation, taps available for drawing water for drinking or cooking purposes shall, as far as possible, be supplied from the service pipe, and not from any cistern. **Taps for drinking water.**

32. No consumer's tap or stand-pipe shall be fixed in any public thoroughfare, common staircase, passage, or outside any premises without special permission in writing from the President of the Corporation. Every stand-pipe or fountain, which is accessible to the occupants of more than one dwelling-house, shall be provided with a self-closing or other suitable waste-preventing tap. No such tap or stand-pipe shall be used for drawing water unless and until it has been approved by the authorised officer. If, in the judgment of the authorised officer, any such tap or stand-pipe shall, either directly or indirectly, conduce to or be so used or dealt with as to cause contamination, waste or misuse of the water of the Corporation, such tap or stand-pipe shall be removed by the consumer within fourteen days of the receipt by him of a requisition to that effect, signed by the authorised officer. **Consumer's outside taps or stand-pipes.**

33. Pumps drawing water direct from the water-supply pipe are objectionable, and will only be allowed by special permission of the President for a limited period which may, however, be extended from time to time by the President. Such pumps shall be open to inspection at any time and, should the President consider it necessary, will have to be removed at 24 hours' notice, and no claim shall lie against the Corporation for damages for removal of such a pump. **Pumps drawing water direct from water-supply pipe.**

34. No consumers' pipes shall be connected to any cistern, tank, water-butt, or other receptacle used for the storage of rain water, or water other than from the mains of the Corporation, and no supply pipe shall be connected to any water-closet, urinal, steam boiler, or any closed vessel otherwise than through the supply cistern thereof. **Prohibited connection of consumers' pipes.**

35. Except with the special consent in writing of the President, no water supplied by the Corporation shall be used for other than domestic purposes, as defined in the Madras Corporation Act 191 Section (see Appendix, page), nor shall such water be drawn from any hose, movable pipe, private hydrant, or automatic sprinkler, unless such water be passed through a meter in accordance with Bye-law No. 36. **Certain supplies to be passed.**

Note.—The blanks in paragraphs 29 and 35 will be filled in when the Bye-laws are finally drafted

Agreement for meter supplies.

36. In all cases where the water of the Corporation is to be supplied through a meter, the consumer shall sign an agreement in the form prescribed in Schedule B, attached to these Bye-laws and Regulations, or as otherwise required by the Corporation, and no such supply shall be taken from the mains of the Corporation unless and until such agreement has been signed and the provisions therein contained have been carried out to the satisfaction of the authorised officer.

Charges for water supplied by meter.

37. In the case of first-class service provided with water meter, the free allowance of water for domestic purpose will be at the rate of 160 gallons per month for every rupee of rental valuation of the house as recorded in the assessment books of the Corporation. In no case will the free allowance be less than 3,000 gallons per month nor more than 10,000 gallons per month. The President may alter the limit in special cases where he considers a further allowance equitable. The charge for non-domestic supplies, and for domestic supplies exceeding the free allowance, shall be As. 12 per 1,000 gallons. In calculating the amount by which the water used, the quantity will be taken monthly to the nearest 1,000 gallons.

The Standing Committee may if they consider it desirable, reduce the rate charged in the case of especially large consumers who take water for business purposes.

Water required for building purposes, etc.

38. Where supplies are required for lime-slaking, building operations, and other temporary purposes including work executed for the Corporation by a contractor or any other person or for any other party, public or private, the consumer must arrange for a meter supply and must pay by meter measurement at the rate As. 12 per 1,000 gallons for all water supplied.

Cattle troughs.

39. Watering troughs for the use of horses or cattle supplied with the water of the Corporation, wherever fixed, shall be of cast-iron masonry or other material approved by the Corporation and fitted with a ball tap, such ball tap to be enclosed in a covered box, and with the pipe supplying same properly and completely protected from injury, to the satisfaction of the authorised officer.

List of authorised plumbers.

40. The Corporation will from time to time publish a list of "Authorised Plumbers," and will require that all work carried out by or on behalf of themselves or consumers in connection with the supply or use of the water of the Corporation shall be executed by one or other of plumbers named in such list or their workmen (see Schedule C, page 137).

Penalties.

41. Every person who shall offend against any of the foregoing Bye-laws shall be liable for every such offence to a penalty of Fifty Rupees, and in the case of a continuing offence to a further penalty of Twenty Rupees for each day after written notice of the offence from the Corporation.

Provided nevertheless that the Court before whom any proceedings may be taken in respect of any such offence may, if they think fit, adjudge the payment as a penalty of any sum less than the full amount of the penalty imposed by this Bye-law.

SCHEDULE A.

Application for a Supply of Water.

$\frac{I}{We}$, the undersigned, hereby make application to the Corporation of the City of Madras for water to be supplied to the premises and for the purposes described below. $\frac{I}{We}$ enclose deposit of Rs. 5 as required by the Bye-laws and $\frac{I}{we}$ agree to pay in advance one-fourth of the undermentioned Annual Charges or of such Annual Charges as the Corporation may from time to time be entitled to make, and to conform to the Bye-laws and Regulations of the Corporation in force for the time being.

The licensed plumber whom $\frac{I}{we}$ propose to employ is—

Name..

Address.......... ....

Description of Premises
Situation of Premises
Rental valuation as recorded in the books of the Corporation. Rs.

Description and position of fittings to be used for—

(*a*) *First-class Domestic Supply.*

Position and size of meter.
Position and size of stop-cocks.
Sizes, weights and materials of pipes.
Storage cisterns, size, position and materials.
Baths.
Lavatories.
Sinks.
Water-closet cisterns.
Stand-pipes.
Cisterns for hot water supply.
Description of joints.
Total number of cocks supplied.

(*b*) *Second-class Domestic Supply.*

Position and size of stop-cocks.
Sizes, weights and materials of pipes.
Stand-pipes.
Description of joints.
Total number of cocks supplied.

(*c*) *Special supplies in accordance with the Corporation scale of charges.*

Position of meter.
Number and size of cocks.
Cisterns, size and position.
Purposes for which water is required.

And $\frac{I}{we}$ hereby undertake to give the Corporation due notice of any additions or alterations to the above-mentioned supplies which $\frac{I}{we}$ may desire to make.

(Signature of Consumer)..

Date..

I have inspected the premises, and find that proper and sufficient arrangements have been made for draining off waste water.

(Signature of authorised Officer)..

Date..

The application is sanctioned provided that Rs.
Municipal charges are paid to the Revenue Department within 10 days from date of sanction.

(Signature of Corporation Engineer)..

Date..

Received Rs. being Municipal charges for the sanctioned work.

(Signature of Revenue Officer)..

Date..

In compliance with the above application, and after inspection of the fittings above described, I have to-day turned on the water to the above premises.

(Signature of authorised Officer)..

Date..

SCHEDULE B.

Agreement for the Supply of Water by Meter.

AN AGREEMENT made this day of 19 between the Corporation of the City of Madras hereinafter called the Corporation of the one part, and hereinafter called the Consumer of the other part.

Whereas the Consumer has applied to the Corporation for a supply of water to premises situated at for purposes other than or additional to those for which the Consumer is entitled to obtain a free supply of water, namely, for

The Corporation hereby agree to supply and the Consumer agrees to take water by meter on the following terms and conditions, that is to say :—

(1) The water shall be measured by a meter of the size of to be provided by the Corporation. The said meter shall remain the property of the Corporation, by whom it shall be fixed and maintained. The Consumer shall pay to the Corporation a quarterly sum of for the use of this meter by way of rent.

(2) The Corporation may at their own cost change the said meter at any time for another of the same size, and the terms and conditions of this Agreement shall apply equally to any such substituted meter.

(3) The Consumer shall pay monthly to the Corporation, for any water used in excess of the free allowance in accordance with the scale of charges in force for the time being.

(4) The record by the meter of the quantity of water consumed shall be read by the authorized officer of the Corporation as nearly as practicable on the same corresponding day in each month, and the quantity shown to have passed through the meter since the previous reading, shall be deemed to be the consumption of water for the quarter.

(5) Should the said meter stop working or fail to indicate the quantity of water consumed, the Consumer shall give immediate notice thereof to the Corporation, and the quantity of water consumed during any period when the meter may be out of order, shall be estimated and finally fixed by the Corporation from what they may consider to be the most reliable data at their command. The Corporation shall be entitled to remove the meter for the purpose of testing it at their own cost, whenever they think it desirable to do so. The Consumer may require the meter to be tested by the Corporation at all reasonable times, and in the event of the meter being found to measure correctly, the Consumer shall pay to the Corporation the sum of Ten Rupees to cover the cost of removal, testing and re-fixing. The meter shall be deemed correct if it registers within 5 per cent. either above or below the quantity of water actually passing through it.

(6) In default of payment by the Consumer of the amounts due under this Agreement, the Corporation may cut off the supply of water, and exercise the like remedies as they are empowered to enforce in relation to the supply of water for domestic purposes.

(7) The meter rent hereinbefore mentioned shall cover ordinary wear and tear of the meter, but in the case of damage due to accident, or misuse, the Consumer shall, on demand, repay to the Corporation all costs and expenses incurred by them in repairing the said meter, if so damaged.

(8) The Consumer shall provide immediately inside his premises a suitable site for the meter, and shall provide a suitable chamber for its protection. The meter shall be so placed as to be easily accessible for inspection, repair or renewal.

(9) The position and bore of the pipe supplying the meter shall be determined by the Corporation, and all pipes and fittings used in connection with the supply of water under this Agreement shall conform to the Bye-laws and Regulations of the Corporation relating to the supply of water for domestic purposes.

(10) No liability shall attach to the Corporation in the event of any failure, deficiency, or lack or excess of pressure in the supply of water under this Agreement.

(11) All hydraulic engines or other apparatus liable to cause shock or vibration to the meter or the supply pipe and fittings shall be provided with air-vessels of design and dimensions approved by the Corporation, and such air-vessels shall be maintained in working order to the satisfaction of the Corporation at the cost of the Consumer.

(12) This Agreement may be determined at any time by one Calendar month's notice in writing on either side, and on the expiration of such notice the Consumer shall deliver up to the Corporation the said meter in good condition, subject only to fair wear and tear, and shall pay to the Corporation all sums payable under this Agreement up to the date of the expiration of such notice.

(13) The powers, rights and remedies of the Corporation and the Consumer respectively under this Agreement shall be in addition to and not in derogation of the powers, rights and remedies conferred on or vested in them by the Madras City Municipal Act of 19 , or otherwise, or by Common Law.

As witness, etc.

(*Signature of Corporation Representative*)..

(*Signature of Consumer*)..

Note.—The scale of charges for water and rent of meters may be attached to this Agreement as a Schedule.

SCHEDULE C.

Authorisation of Plumbers.

Any authorised list of plumbers issued by the Corporation shall include the names and addresses of all plumbers who shall make application to the Corporation on the form provided for this purpose, and who shall either—

(1) produce a certificate of registration from the Worshipful Company of Plumbers of Great Britain under the conditions appertaining to the National Registration of Plumbers, or from such other body as may be set up by Statute or be approved by the Local Government, and upon such terms as the Government shall sanction, or

(2) satisfy the Corporation of their competence to carry out plumbing work in accordance with the Regulations of the Corporation.

Any plumber applying for a certificate may be required to pass a theoretical and practical examination before a certificate is granted. Master plumbers shall only employ certificated plumbers to do plumbing work.

Every Plumber applying for a license shall deposit with the Corporation the sum of Rs. 200 as a security for the due and proper fulfilment of a Plumber's duties. He will then be licensed annually after signing an agreement, and paying a fee of Rs. 10 within the first month of each official year.

In the event of the Corporation have cause for complaint against any plumber whose name is included on the Authorised List for doing unsatisfactory work for contravening the Regulations of the Corporation, and failing to receive reasonable or sufficient explanation or excuse for such contravention of the Regulations, the Corporation shall be entitled to summarily cancel the name of such defaulting plumber from the Authorised List. In such event the Corporation may retain the whole or any party of the Rs. 200 deposited as security.

APPENDIX

Data regarding sizes of Pipes, Populations to be served,

For positions of Mains,

In fourth column, red figures indicate new Pipes,

Main No. 1

(For Hydraulic Gradient,

Chainage of Main in feet.	Length of Section.	Estimated Population for which the Main is designed.	Diameter of Pipe in inches.	Supply at 75 gallons per head per day.				
				Discharge in cubic feet per second.	Hydraulic Gradient.	Velocity in feet per second.	Loss of Head in feet.	Hy. Gradient level in feet above a datum 20 feet below mean sea level.
								79·66
0— 970	970	224,108	42	31·13	1 in 1,090	3·20	0·88	78·78
970— 2,860	1,890	221,008	42	30·70	„ 1,120	3·20	1·68	77·10
2,860—13,759	10,899	196,954	42	27·35	„ 1,380	2·80	7·89	69·21
13,759—14,829	1,070	146,100	36	20·29	„ 1,100	2·90	0·97	68·24
14,829—16,829	2,000	142,489	36	19·79	„ 1,150	2·80	1·70	66·54
16,829—18,669	1,840	131,396	36	18·25	„ 1,340	2·60	1·37	65·17
18,669—19,869	1,200	120,427	36	16·73	„ 1,000	2·88	1·20	63·97
19,869—20,169	300	107,303	33	14·90	„ 1,250	2·50	0·24	63·73
20,169—21,864	1,695	99,216	30	13·78	„ 900	2·80	1·88	61·85
21,864—23,839	1,975	64,154	27	8·91	„ 1,180	2·30	1·60	60·25
23,839—24,439	600	47,453	24	6·59	„ 1,160	2·10	0·51	59·74
24,439—25,749	1,310	31,611	20	4·39	„ 970	2·00	1·36	58·38
25,749—27,969	2,220	25,921	18	3·60	„ 800	2·00	2·77	55·61
27,969—29,089	1,120	9,253	14	1·27	„ 1,510	1·20	0·74	54·87
29,089—30,789	1,700	7,250	12	1·01	„ 950	1·40	1·76	53·11
30,789—32,389	1,600	5,250	10	0·73	„ 770	1·40	2·07	51·04
32,389—32,709	320	2,250	7	0·31	„ 550	1·20	0·58	50·46
32,709—35,162	2,453	1,250	6	0·17	„ 860	0·75	2·85	47·61

APPENDIX No. 1.

DATA REGARDING SIZES OF PIPES, POPULATION TO BE SERVED, DISCHARGES AND PRESSURES UNDER PROPOSED NEW DISTRIBUTION SYSTEM.

	Pages
Main No. 1	... 140 and 141
Do. Nos. 2 and 3	... 142 „ 143
Do. „ 4 „ 5	... 144 „ 145
Do. „ 6 „ 7	... 146 „ 147
North Mint Street, Royapuram and Tiruvattiyur High Road Branches ...	... 148 „ 149
Perambur, Vyasarpadi and Chintadripet Branches	... 150 „ 151
Marshall's Road, Ice House Road and North Mylapore Branches ...	... 152 „ 153
Kutcherry Road Branch	... 154 „ 155

No. 1.

Discharges and Pressures under proposed new Distribution System.

see Drawing No. 1.

black figures refer to existing Pipes which are to be utilised.

(Starting from 48 inches Steel Main at Kilpauk.
Ending at North End of Tondiarpet.
Total Length, 35,162 feet.
see Drawing No. 31).

Supply at 50 gallons per head per day.					Supply at 25 gallons per head per day.				
Discharge in cubic feet per second.	Hydraulic Gradient.	Velocity in feet per second.	Loss of Head in feet.	Hy. Gradient level in feet above a datum 20 feet below mean sea level.	Discharge in cubic feet per second.	Hydraulic Gradient.	Velocity in feet per second.	Loss of Head in feet.	Hy. Gradient level in feet above a datum 20 feet below mean sea level.
				85·39					88·85
20·75	1 in 2,450	2·10	0·40	84·99	10·37	1 in 9,810	1·05	0·10	88·75
20·46	„ 2,520	2·10	0·75	84·24	10·23	„ 10,080	1·05	0·19	88·56
18·23	„ 3,120	1·90	3·49	80·75	9·12	„ 12,420	0·95	0·88	87·68
13·53	„ 2,470	1·90	0·43	80·32	6·76	„ 9,880	0·95	0·11	87·57
13·19	„ 2,590	1·80	0·77	79·55	6·60	„ 10,350	0·90	0·18	87·39
12·17	„ 3,010	1·70	0·61	78·94	6·08	„ 12,060	0·85	0·15	87·24
11·15	„ 2,250	1·90	0·53	78·41	5·58	„ 9,000	0·95	0·13	87·11
9·93	„ 2,800	1·70	0·11	78·30	4·97	„ 11,200	0·85	0·03	87·08
9·19	„ 2,020	1·80	0·84	77·46	4·59	„ 8,100	0·90	0·21	86·87
5·94	„ 2,650	1·50	0·75	76·71	2·97	„ 10,620	0·75	0·19	86·68
4·39	„ 2,610	1·30	0·23	76·48	2·20	„ 10,440	0·65	0·06	86·62
2·92	„ 2,180	1·40	0·61	75·85	1·46	„ 8,730	0·70	0·15	86·47
2·40	„ 1,800	1·40	1·23	74·64	1·20	„ 7,200	0·70	0·31	86·16
0·85	„ 3,400	0·90	0·32	74·32	0·42	„ 13,590	0·45	0·08	86·08
0·67	„ 2,140	0·90	0·79	73·53	0·33	„ 8,550	0·45	0·20	85·88
0·48	„ 1,730	0·90	0·92	72·61	0·24	„ 6,930	0·45	0·23	85·65
0·20	„ 1,230	0·80	0·26	72·35	0·10	„ 4,950	0·40	0·06	85·59
0·11	„ 1,930	0·50	1·27	71·08	0·05	„ 7,940	0·25	0·31	85·28

APPENDIX

Main No. 2

(For Hydraulic Gradient,

Chainage of Main in feet.	Length of Section.	Estimated Population for which the Main is designed.	Diameter of Pipe in inches.	Supply at 75 gallons per head per day.				
				Discharge in cubic feet per second.	Hydraulic Gradient.	Velocity in feet per second.	Loss of Head in feet.	Hy. Gradient level in feet above a datum 20 feet below mean sea level.
								77·10
0—4,300	4,300	24,053	18	3·34	1 in. 1,000	1·80	4·30	
								72·80
4,300—7,000	2,700	15,623	16	2·17	„ 1,130	1·60	2·39	
								70·41
7,000—8,760	1,760	10,203	14	1·42	„ 1,250	1·40	1·41	
								69·00
8,760—13,570	4,810	4,811	14	0·67	„ 4,500	0·62	1·07	
								67·93
13,570—16,370	2,800	2,055	14	0·28	„ 40,000	0·21	0·70	
								67·23
16,370—17,692	1,322	2,055	12	0·28	„ 5,000	...	0·26	
								66·97

Main No. 3

(For Hydraulic Gradient,

								79·66
0—4,300	4,300	311,478	42	43·26	1 in. 560	4·50	7·68	
								71·98
4,300—4,650	350	113,301	27	15·74	„ 390	4·00	0·89	
								71·09
4,650—5,215	565	97,737	27	13·57	„ 530	3·40	1·03	
								70·06
5,215—5,790	575	94,928	27	13·18	„ 560	3·30	1·03	
								69·03
5,790—8,810	3,020	89,089	27	12·37	„ 630	3·10	4·79	
								64·24
8,810—9,410	600	78,140	27	10·86	„ 820	2·70	0·73	
								63·51
9,410—10,050	640	64,098	24	8·90	„ 640	2·80	1·00	
								62·51
10,050—10,500	450	39,697	24	5·51	„ 1,640	1·70	0·27	
								62·24
10,500—13,530	3,030	39,358	24	5·47	„ 1,650	1·70	1·83	
								60·41
13,530—13,759	229	39,358	21	5·47	„ 820	2·80	0·28	
								60·13
13,759—14,959	200	30,216	16	4·20	„ 320	3·00	3·75	
								56·38
14,959—15,284	325	22,166	15	3·08	„ 410	2·50	0·79	
								55·59
15,284—16,039	755	22,166	14	3·08	„ 280	2·90	2·69	
								52·90
16,039—16,659	620	5,416	12	0·75	„ 1,900	1·00	0·33	
								52·57
16,659—17,559	900	5,416	10	0·75	„ 730	1·40	1·23	
								51·34

No. 1—*contd.*

Starting from 2,860 feet on Main No. 1.
Ending at the Junction of Cemetery Road and Tiruvattiyur High Road in Tondiarpet.
Total Length, 17,692 feet.

see Drawing No. 32.)

Supply at 50 gallons per head per day.					Supply at 25 gallons per head per day.				
Discharge in cubic feet per second.	Hydraulic Gradient.	Velocity in feet per second.	Loss of Head in feet.	Hy. Gradient level in feet, above a datum 20 feet below mean sea level.	Discharge in cubic feet per second.	Hydraulic Gradient.	Velocity in feet per second.	Loss of Head in feet.	Hy. Gradient level in feet, above a datum 20 feet below mean sea level.
				84·24					88·56
2·23	1 in 2,250	1·20	1·91		1·11	1 in 9,000	0·60	0·48	
				82·33					88·08
1·45	„ 2,520	1·06	1·07		0·72	„ 10,170	0·53	0·27	
				81·26					87·81
0·94	„ 2,800	0·93	0·63		0·47	„ 11,250	0·46	0·16	
				80·63					87·65
0·45	„ 10,120	0·41	0·48		0·22	„ 40,500	0·26	0·12	
				80·15					87·53
0·19	„ 90,000	0·14	0·31		0·10	„ 360,000	0·07	0·08	
				79·84					87·45
0·19	„ 11,250	...	0·12		0·10	„ 45,000	...	0·03	
				79·72					87·42

Starting from 48 inches Steel Main at Kilpauk.
Ending at the Junction of General Hospital Road and Mint Street, Georgetown.
Total Length, 17,559 feet.

see Drawing No. 33.)

				85·39					88·85
28·84	1 in 1,260	3·00	3·41		14·42	1 in 5,040	1·50	0·85	
				81·98					88·00
10·19	„ 880	2·60	0·39		5·25	„ 3,510	1·33	0·09	
				81·59					87·91
9·05	„ 1,190	2·20	0·47		4·52	„ 4,760	1·13	0·12	
				81·12					87·79
8·79	„ 1,260	2·20	0·46		4·39	„ 5,040	1·10	0·11	
				80·66					87·68
8·25	„ 1,420	2·10	2·13		4·12	„ 5,680	1·03	0·54	
				78·53					87·14
7·24	„ 1,840	1·80	0·33		3·62	„ 7,360	0·90	0·08	
				78·20					87·06
5·93	„ 1,440	1·90	0·44		2·96	„ 5,760	0·93	0·11	
				77·76					86·95
3·68	„ 3,690	1·12	0·12		1·84	„ 14,760	0·56	0·03	
				77·64					86·92
3·64	„ 3,710	1·12	0·82		1·82	„ 14,840	0·56	0·20	
				76·82					86·72
3·64	„ 1,840	1·50	0·13		1·82	„ 7,360	0·93	0·03	
				76·69					86·69
2·80	„ 720	2·00	1·66		1·40	„ 2,880	1·00	0·42	
				75·03					86·27
2·05	„ 920	1·70	0·35		1·02	„ 3,680	0·83	0·09	
				74·68					86·18
2·05	„ 630	1·90	1·20		1·02	„ 2,520	0·96	0·30	
				73·48					85·88
0·50	„ 4,270	0·66	0·15		0·25	„ 17,080	0·33	0·04	
				73·33					85·84
0·50	„ 1,640	0·90	0·55		0·25	„ 6,560	0·46	0·14	
				72·78					85·70

APPENDIX

Main No. 4

(For Hydraulic Gradient,

Chainage of Main in feet.	Length of Section.	Estimated Population for which the Main is designed.	Diameter of Pipe in inches.	Supply at 75 gallons per head per day.				
				Dischaige in cubic feet per second.	Hydraulic Gradient.	Velocity in feet per second.	Loss of Head in feet.	Hy. Gradient level in feet, above a datum 20 feet below mean sea level.
								71·98
0— 2,820	2,820	198,177	36	27·52	1 in 600	3·90	4·70	67·28
2,820— 3,880	1,060	142,983	36	19·85	„ 1,140	2·80	2·58	64·70
3,880— 5,120	1,240	136,313	30	18·93	„ 480	3·90	0·92	63 78
5,120— 6,820	1,700	82,347	27	11·43	„ 740	2·90	2·29	61·49
6,820— 8,120	1,300	77,721	27	10·79	„ 830	2·70	1·56	59·93
8,120— 9,320	1,200	63,995	27	8·89	„ 1,200	2·20	1·00	58·93
9,320—11,170	1,850	61,621	27	8·56	„ 1,300	2·20	1·42	57·51
11,170—11,520	350	55,327	27	7·58	„ 1,600	1·90	0·22	57·29
11,520—12,220	700	49,010	27	6·81	„ 2,000	1·70	0·35	56·94
12,220—12,660	440	49,010	24	6·81	„ 1,070	2·30	0·41	56·53
12,660—12,960	300	49,010	22	6·81	„ 680	2·60	0·44	56·09
12,960—14,770	1,810	18,017	14	2·49	„ 430	2·30	4·20	51·89

Main No. 5

(For Hydraulic Gradient,

								67·28
0— 2,958	2,958	46,053	22	6·39	1 in 770	2·40	3·84	63·44
2,958— 3,521	563	40,035	22	5·56	„ 1,000	2·10	0·56	62·88
3,521— 4,358	837	40,035	21	5·56	„ 780	2·30	1·07	61·81
4,358— 5,721	1,363	33,950	21	4·71	„ 1,090	2·00	1·25	60·56
5,721— 9,598	3,877	33,150	21	4·60	„ 1,130	1·90	3·43	57·13
9,598—11,813	2,215	33,150	20	4·60	„ 880	2·10	2·52	54·61
11,813—13,263	1,450	33,150	18	4·60	„ 500	2·60	2·90	51·71
13,263—14,613	1,350	26,119	18	3·63	„ 800	2·00	1·68	50·03
14,613—15,003	390	3,984	14	0·55	„ 4,700	0·50	0·08	49·95
15,003—15,688	685	3,984	12	0·55	„ 3,030	0·80	0·22	49·73

No. 1—*contd.*

Starting from 4,300 feet on Main No. 3.
Ending at Junction of Triplicane High Road and Ice House Road, Triplicane.
Total Length, 14,770 feet.
see Drawing No. 34.)

Supply at 50 gallons per head per day.					Supply at 25 gallons per head per day.				
Discharge in cubic feet per second.	Hydraulic Gradient.	Velocity in feet per second.	Loss of Head in feet.	Hy. Gradient level in feet, above a datum 20 feet below mean sea level.	Discharge in cubic feet per second.	Hydraulic Gradient.	Velocity in feet per second.	Loss of Head in feet.	Hy. Gradient level in feet above a datum 20 feet below mean sea level.
				81·98					88·00
18·34	1 in 1,350	2·60	2·08		9·17	1 in 5,400	1·30	0·52	
				79·90					87·48
13·23	„ 2,560	1·90	1·14		6·61	„ 10,240	0·93	0·28	
				78·76					87·20
12·62	„ 1,080	2·50	0·41		6·31	„ 4,320	1·30	0·10	
				78·35					87·10
7·62	„ 1,660	1·90	1·02		3·81	„ 6,640	0·96	0·25	
				77·33					86·85
7·20	„ 1,870	1.80	0·68		3·60	„ 7,480	0·90	0·17	
				76·65					86·68
5·93	„ 2,700	1·50	0·44		2·96	„ 10,800	0·73	0·11	
				76·21					86·57
5·71	„ 2,920	1·40	0·63		2·85	„ 11,680	0·73	0·15	
				75·58					86·42
5·12	„ 3,600	1·26	0·10		2·56	„ 14,000	0·63	0·02	
				75·48					86·40
4·54	„ 4,500	1·12	0·16		2·26	„ 18,000	0·56	0·04	
				75·32					86·36
4·54	„ 2,410	1·40	0·18		2·26	„ 9,640	0·76	0·04	
				75·14					86·32
4·54	„ 1,530	1·70	0·19		2·26	„ 6,120	0·86	0·04	
				74·95					86·28
1·67	„ 970	1·54	1·86		0·83	„ 3,880	0·76	0·46	
				73·09					85·82

Starting from 2,820 feet on Main No. 4.
Ending at Junction of Narayana Naicken Street and Angappa Naicken Street in Georgetown.
Total Length, 15,688 feet.

see Drawing No. 35.)

				79·90					87·48
4·26	1 in 1,730	1·60	1·71		2·13	1 in 6,930	0·80	0·43	
				78·19					87·05
3·71	„ 2,250	1·40	0·25		1·85	„ 9,000	0·70	0·06	
				77·94					86·99
3·71	„ 1,760	1 50	0·48		1·85	„ 7,020	0·76	0·12	
				77·46					86·87
3·14	„ 2,450	1·30	0·56		1·57	„ 9,810	0·66	0·14	
				76·90					86·73
3·07	„ 2,540	1·20	1·53		1·53	„ 10,170	0·63	0·38	
				75·37					86·35
3·07	„ 1,980	1·40	1·12		1·53	„ 7,920	0·70	0·28	
				74·25					86·07
3·07	„ 1,130	1·70	1·28		1·53	„ 4,500	0·86	0·32	
				72·97					85·75
2·42	„ 1,800	1·40	0·75		1·21	„ 7,200	0·66	0·19	
				72·22					85·56
0·37	„ 10,580	0·32	0·04		0·18	„ 42,300	0·16	0·01	
				72·18					85·55
0·37	„ 6,820	0·56	0·10		0·18	„ 27,270	0·26	0·02	
				72·08					85·53

APPENDIX

Main No. 6

(For Hydraulic Gradient,

Chainage of Main in feet.	Length of Section.	Estimated Population for which the Main is designed.	Diameter of Pipe in inches.	Supply at 75 gallons per head per day.				
				Discharge in cubic feet per second.	Hydraulic Gradient.	Velocity in feet per second.	Loss of Head in feet.	Hy. Gradient level in feet, above a datum 20 feet below mean sea level.
								70·13
0— 1,400	1,400	10,375	14	1·44	1 in 1,250	1·30	1·32	68·81
1,400— 5,000	3,600	7,775	14	1·08	„ 2,150	1·00	1·67	67·14
5,000—10,300	5,300	4,725	10	0·65	„ 960	1·30	5·52	61·62
10,300—12,800	2,500	2,000	7	0·28	„ 720	1·00	3·47	58·15
12,800—17,250	4,450	500	7	0·07	„ 2,880	...	1·54	56·61

Main No. 7

(For Hydraulic Gradient,

								79·66
0— 900	900	87,195	30	12·11	1 in 1,120	2·50	0·80	78·86
900— 1,330	430	84,527	30	11·74	„ 1,220	2·40	0·35	78·51
1,330— 2,960	1,630	82,996	30	11·52	„ 1,240	2·30	1·31	77·20
2,960— 5,950	2,990	80,453	30	11·17	„ 1,320	2·20	2·27	74·93
5,950— 7,250	1,300	79,312	30	11·02	„ 1,360	2·20	0·96	73·97
7,250—10,000	2,750	78,107	30	10·85	„ 1,420	2·20	1·93	72·04
10,000—10,200	200	77,067	30	10·70	„ 1,440	2·20	0·13	71·91
10,200—12,500	2,300	73,141	30	10·16	„ 1,620	2·10	1·42	70·49
12,500—13,100	600	72,491	30	10·07	„ 1,640	2·00	0·36	70·13
13,100—17,400	4,300	31,800	20	4·41	„ 940	2·00	4·57	65·56
17,400—19,900	2,500	30,299	18	4·20	„ 600	2·40	4·16	61·40
19,900—21,800	1,900	20,673	16	2·87	„ 670	2·00	2·83	58·57
21,800—22,600	800	18,888	16	2·62	„ 800	1·90	1·00	57·57
22,600—25,400	2,800	5,733	12	0·80	„ 1,700	1·00	1·64	55·93
25,400—26,000	600	3,988	10	0·55	„ 1,300	1·00	0·46	55·47
26,000—27,800	1,800	1,000	7	0·14	„ 1,580	...	1·20	54·27

No. 1—*contd.*

Starting from 13,100 feet on Main No. 7.
Ending at Junction of Greenway's Road and Brodie's Road, Adyar.
Total Length, 17,250 feet.
see Drawing No. 36.)

Supply at 50 gallons per head per day.					Supply at 25 gallons per head per day.				
Discharge in cubic feet per second.	Hydraulic Gradient.	Velocity in feet per second.	Loss of Head in feet.	Hy. Gradient level in feet, above a datum 20 feet below mean sea level.	Discharge in cubic feet per second.	Hydraulic Gradient.	Velocity in feet per second.	Loss of Head in feet.	Hy. Gradient level in feet, above a datum 20 feet below mean sea level.
				81·12					87·79
0·96	1 in 2,810	0·90	0·59	80·53	0·48	1 in 11,240	0·43	0·15	87·64
0·71	„ 4,840	0·66	0·74	79·79	0·36	„ 19,360	0·33	0·18	87·46
0·43	„ 2,160	0·86	2·45	77·34	0·22	„ 8,640	0·43	0·61	86·85
0·18	„ 1,620	0·66	1·54	75·80	0·09	„ 6,480	0·33	0·38	86·47
0·05	„ 6,480	...	0·68	75·12	0·01	„ 25,920	...	0·17	86·30

Starting from 48 inches Steel Main at Kilpauk.
Ending at Junction of Brodie's Road and Greenway's Road, Adyar.
Total Length, 27,800 feet.
see Drawing No. 37.)

				85·39					88·85
8·07	1 in 2,520	1·70	0·36	85·03	4·03	1 in 10,080	0·80	0·09	88·76
7·82	„ 2,730	1·60	0·16	84·87	3·91	„ 10,920	0·80	0·04	88·72
7·68	„ 2,790	1·50	0·58	84·29	3·84	„ 11,160	0·70	0·15	88·57
7·44	„ 2,950	1·40	1·01	83·28	3·72	„ 11,800	0·70	0·25	88·32
7·34	„ 3,050	1·40	0·43	82·85	3·67	„ 12,200	0·70	0·11	88·21
7·23	„ 3,190	1·50	0·86	81·99	3·61	„ 12,760	0·70	0·21	88·00
7·13	„ 3,250	1·50	0·06	81·93	3·56	„ 13,000	0·70	0·02	87·98
6·77	„ 3,640	1·40	0·63	81·30	3·38	„ 14,540	0·70	0·15	87·83
6·71	„ 3,690	1·30	0·16	81·14	3·36	„ 14,760	0·70	0·04	87·79
2·94	„ 2,110	1·30	2·03	79·11	1·47	„ 8,440	0·70	0·50	87·29
2·80	„ 1,350	1·60	1·85	77·26	1·40	„ 5,440	0·80	0·46	86·83
1·91	„ 1,510	1·40	1·21	76·05	0·96	„ 6,040	0·66	0·31	86·52
1·75	„ 1,800	1·20	0·44	75·61	0·87	„ 7,200	0·63	0·11	86·41
0·53	„ 3,820	0·66	0·73	74·88	0·27	„ 15,290	0·63	0·18	86·23
0·37	„ 2,930	0·66	0·20	74·68	0·18	„ 11,720	0·33	0·05	86·18
0·09	„ 3,550	...	0·51	74·17	0·05	„ 14,200	0·33	0·13	86·05

APPENDIX

North Mint Street Branch

(For Hydraulic Gradient,

Chainage of Main in feet.	Length of Section.	Estimated Population for which the Main is designed.	Diameter of Pipe in inches.	Supply at 75 gallons per head per day.				
				Discharge in cubic feet per second.	Hydraulic Gradient.	Velocity in feet per second.	Loss of Head in feet.	Hy. Gradient level in feet, above a datum 20 feet below mean sea level.
0—576	576	50,854	18	7·06	1 in 220	4·00	2·62	69·21
576—1,167	591	46,165	18	6·41	„ 260	3·60	2·27	66·59
1,167—2,016	849	33,062	18	4·59	„ 500	2·60	1·69	64·32
2,016—2,877	861	17,213	14	2·39	„ 470	2·20	1·80	62·63
2,877—3,391	514	11,471	12	1·59	„ 450	2·00	1·14	60·83
3,391—3,791	400	6,512	12	0·91	„ 1,350	1·20	0·30	59·69
3,791—4,616	825	6,512	10	0·91	„ 500	1·70	1·65	59·39
								57·74

Rayapuram Branch

(For Hydraulic Gradient,

0—1,700	1,700	16,579	14	2·30	1 in 500	1·60	3·40	61·85
1,700—2,550	850	13,579	10	1·88	„ 120	3·50	7·08	58·45
2,550—3,850	1,300	2,764	7	0·38	„ 400	1·40	3·25	51·37
								48·12

Tiruvattiyur High Road Branch

(For Hydraulic Gradient,

0—2,000	2,000	21,483	18	2·98	1 in 1,200	1·70	1·66	61·85
2,000—2,308	308	21,483	12	2·98	„ 130	3·80	2·37	60·19
2,308—4,178	1,870	15,592	12	2·17	„ 250	2·70	7·48	57·82
4,178—7,978	3,800	1,346	8	0·19	„ 2,800	0·40	1·36	50·34
7,978—9,173	1,195	346	7	0·15	„ 2,800	...	0·29	48·98
								48·69

No. 1—*contd.*

Starting from 13,759 feet on Main No. 1.
Ending at Junction of Basin Bridge Road and Mint Street in Georgetown.
Total Length, 4,616 feet.
see Drawing No. 38.)

Supply at 50 gallons per head per day.					Supply at 25 gallons per day.				
Discharge in cubic feet per second.	Hydraulic Gradient.	Velocity in feet per second.	Loss of Head in feet.	Hy. Gradient level in feet, above a datum 20 feet below mean sea level.	Discharge in cubic feet per second.	Hydraulic Gradient.	Velocity in feet per second.	Loss of Head in feet.	Hy. Gradient level in feet, above a datum 20 feet below mean sea level.
				80·75					87·68
4·71	1 in 500	2·60	1·15	79·60	2·35	1 in 2,000	1·33	0·28	87·40
4·27	„ 580	2·40	1·02	78·58	2·14	„ 2,320	1·20	0·25	87·15
3·06	„ 1,120	1·70	0·76	77·82	1·53	„ 4,440	0·86	0·19	86·96
1·59	„ 1,060	1·50	0·80	77·02	0·80	„ 4,240	0·76	0·20	86·76
1·06	„ 1,010	1·30	0·51	76·51	0·53	„ 4,040	0·66	0·13	86·63
0·61	„ 3,040	0·80	0·13	76·38	0·30	„ 12,160	0·40	0·03	86·60
0·61	„ 1,120	1·10	0·74	75·64	0·30	„ 4,480	0·56	0·19	86·41

Starting from 20,169 feet on Main No. 1.
Ending at Ibrahimji Sahib Street and North Beach Road in Tondiarpet.
Total Length, 3,850 feet.
see Drawing No. 38.)

				77·46					86·87
1·53	1 in 1,130	1·40	1·50	75·96	0·77	1 in 4,520	0·53	0·38	86·49
1·26	„ 270	2·30	3·15	72·81	0·63	„ 1,080	1·16	0·79	85·70
0·26	„ 900	0·70	1·44	71·37	0·13	„ 3,600	0·46	0·36	85·34

Starting from 20,169 feet on Main No. 1.
Ending at Junction of Tiruvattiyur High Road and Gumalamman Kovil Street, Tondiarpet.
Total Length, 9,173 feet.
see Drawing No. 38.)

				77·46				0·19	86·87
1·98	1 in 2,700	1·10	0·74	76·72	0·99	1 in 10,800	0·56	0·26	86·68
1·98	„ 290	2·50	1·06	75·66	0·99	„ 1,160	1·26	0·83	86·42
1·44	„ 560	1·80	3·34	72·32	0·72	„ 2,240	0·90	0·15	85·59
0·12	„ 6,300	0·26	0·60	71·72	0·06	„ 25,200	0·13	0·03	85·44
0·03	„ 9,000	...	0·13	71·59	0·02	„ 36,000	...	1·46	85·41

APPENDIX

Perambur Branch

(For Hydraulic Gradient,

Chainage of Main in feet.	Length of Section.	Estimated Population for which the Main is designed.	Diameter of Pipe in inches.	Supply at 75 gallons per head per day.				
				Discharge in cubic feet per second.	Hydraulic Gradient.	Velocity in feet per second.	Loss of Head in feet.	Hy. Gradient level in feet, above a datum 20 feet below mean sea level.
								72·80
0—2,500	2,500	8,430	12	1·15	1 in 820	1·90	3·05	69·75
2,500—6,300	3,800	7,430	10	1·03	" 400	1·90	9·50	60·25
6,300—7,100	800	4,430	8	0·61	" 330	1·70	2·42	57·83
7,100—8,000	900	3,430	7	0·48	" 250	1·80	3·60	54·23
8,000—8,250	250	2,000	6	0·28	" 300	1·40	0·83	53·40

Vyasarpadi Branch

(For Hydraulic Gradient,

								69·00
0—2,500	2,500	5,392	9	0·75	1 in 440	1·70	5·68	63·22
2,500—3,300	800	5,000	9	0·70	" 470	1·60	1·70	61·62
3,300—4,800	1,500	4,392	7	0·61	" 150	2·30	10·00	51·62

Chindatripet Branch

(For Hydraulic Gradient,

								63·78
0—2,400	2,400	27,750	14	3·85	1 in 180	3·60	13·38	50·40
2,400—3,000	600	27,750	14	3·85	" 180	3·60	3·33	47·07
3,000—3,700	700	5,494	10	0·76	" 720	1·40	0·97	46·10
3,700—5,800	2,100	1,000	6	0·14	" 1,200	0·06	1·75	44·35

No. 1—*contd.*

Starting from 4,300 feet on Main No. 2.
Ending at Madavaram Road, in Perambur.
Total Length, 8,250 feet.

see Drawing No. 39.)

Supply at 50 gallons per head per day.					Supply at 25 gallons per head per day.				
Discharge in cubic feet per second.	Hydraulic Gradient.	Velocity in feet per second.	Loss of Head in feet.	Hy. Gradient level in feet, above a datum 20 feet below mean sea level	Discharge in cubic feet per second.	Hydraulic Gradient.	Velocity in feet per second.	Loss of Head in feet.	Hy. Gradient level in feet, above a datum 20 feet below mean sea level.
				82·33					88·08
0·78	1 in 1,840	1·10	1·36	80·97	0·39	1 in 7,360	0·63	0·34	87·74
0·68	„ 900	1·20	4·22	76·75	0·34	„ 3,600	0·63	1·05	86·69
0·41	„ 740	1·20	1·08	75·67	0·20	„ 2,960	0·56	0·27	86·42
0·32	„ 560	1·10	1·60	74·07	0·16	„ 2,240	0·60	0·40	86·02
0·19	„ 670	1·00	0·37	73·70	0·09	„ 2,680	0·46	0·09	85·93

Starting from 8,760 feet on Main No. 2.
Ending at Gantz Road, in Vyasarpadi.
Total Length, 4,800 feet.

see Drawing No. 39.)

				80·63					87·65
0·50	1 in 990	1·20	2·52	78·11	0·25	1 in 3,960	0·56	0·63	87·02
0·46	„ 1,060	1·00	0·75	77·36	0·23	„ 4,240	0·53	0·18	86·84
0·40	„ 340	1·50	4·40	72·96	0·20	„ 1,360	0·76	1·10	85·74

Starting from 5,120 feet on Main No. 4.
Ending at the Junction of Mount Road, near Government House, Chindatripet.
Total Length, 5,800 feet.

see Drawing No. 40.)

				78·35					87·10
2·57	1 in 400	2·40	6·00	72·35	1·29	1 in 1,600	1·20	1·50	85·60
2·57	„ 400	2·40	1·50	70·85	1·29	„ 1,600	1·20	0·38	85·22
0·51	„ 1,620	1·00	0·43	70·42	0·25	„ 6,680	0·46	0·10	85·12
0·09	„ 2,700	0·04	0·80	69·62	0·25	„ 10,800	·02	0·19	84·93

APPENDIX

Marshall's Road Branch

(For Hydraulic Gradient,

Chainage of Main in feet.	Length of Section.	Estimated Population for which the Main is designed.	Diameter of Pipe in inches.	Supply at 75 gallons per head per day.				
				Discharge in cubic feet per second.	Hydraulic Gradient	Velocity in feet per second.	Loss of Head in feet	Hy. Gradient level in feet, above a datum 20 feet below mean sea level.
0—4,540	4,540	23,863	18	3·13	1 in 940	1·90	4·83	63·78
4,540—5,940	1,400	22,681	18	3·15	„ 1,040	1·80	1·35	58·95
5,940—6,540	600	14,969	14	2·08	„ 610	1·90	0·98	57·60
								56·62

Ice House Road Branch

(For Hydraulic Gradient,

0—1,400	1,400	30,316	18	4·21	1 in 590	2·40	2·37	66·98
1,400—5,000	3,600	26,829	18	3·72	„ 760	2·10	4·74	64·61
5,000—5,500	500	19,649	16	2·71	„ 750	1·90	0·66	59·87
5,500—8,400	2,900	16,870	16	2·34	„ 1,000	1·70	2·90	59·21
8,400—9,800	1,400	4,628	12	0·64	„ 2,500	0·80	0·56	56·31
								55·75

North Mylapore Branch

(For Hydraulic Gradient,

0—2,700	2,700	9,626	12	1·34	1 in 630	1·70	4·28	58·25
2,700—4,750	2,050	9,626	12	1·34	„ 630	1·70	3·25	53·97
4,750—6,650	1,900	2,702	10	0·37	„ 2,500	...	0·76	50·72
								49·96

No. 1—*contd.*

Starting from 5,120 feet on Main No. 4.
Ending at the Junction of Pycroft's Road and Westcott's Road.
Total Length, 6,540 feet.

see Drawing No. 40.)

Supply at 50 gallons per head per day.					Supply at 25 gallons per head per day.				
Discharge in cubic feet per second.	Hydraulic Gradient.	Velocity in feet per second.	Loss of Head in feet.	Hy. Gradient level in feet, above a datum 20 feet below mean sea level.	Discharge in cubic feet per second.	Hydraulic Gradient.	Velocity in feet per second.	Loss of Head in feet.	Hy. Gradient level in feet, above a datum 20 feet below mean sea level.
				78·35					87·10
2·21	1 in 2,110	1·20	2·15	76·20	1·10	1 in 8,440	0·63	0·54	86·56
2·10	„ 2,340	1·20	0·60	75·60	1·05	„ 9,360	0·60	0·15	86·41
1·39	„ 1,370	1·30	0·45	75·15	0·69	„ 5,480	0·63	0·11	86·30

Starting from 13,100 feet on Main No. 7.
Ending at the Junction of Barber's Bridge Road and Irusappa Gramany Street in Mylapore.
Total Length, 9,800 feet.

see Drawing No. 41.)

				79·75					87·45
2·81	1 in 1,330	1·60	1·06	78·69	1·40	1 in 5,320	0·80	0·26	87·19
2·48	„ 1,710	1·40	2·11	76·58	1·24	„ 6,840	0·70	0·53	86·66
1·82	„ 1,690	1·20	0·29	76·29	0·91	„ 6,760	0·63	0·07	86·59
1·47	„ 2,250	1·10	1·29	75·20	0·78	„ 9,000	0·53	0·32	86·27
0·43	„ 5,620	0·52	0·25	74·75	0·21	„ 22,480	0·26	0·06	86·21

Starting from 19,900 feet on Main No. 7.
Ending at the Junction of Cutcherry Road and Mundakunniaman Kovil Street, Mylapore.
Total Length, 6,650 feet.

see Drawing No. 41.)

				75·87					86·49
0·89	1 in 1,420	1·10	1·90	73·97	0·45	1 in 5,680	0·56	0·47	86·02
0·89	„ 1,420	1·10	1·44	72·53	0·45	„ 5,680	0·56	0·36	85·66
0·25	„ 5,620	...	0·34	72·19	0·12	„ 22,480	...	0·08	85·58

APPENDIX

Cutcherry Road Branch

(For Hydraulic Gradient,

Chainage of Main in feet.	Length of Section.	Estimated Population for which the Main is designed.	Diameter of Pipe in inches.	Supply at 75 gallons per head per day.				
				Discharge in cubic feet per second.	Hydraulic Gradient.	Velocity in feet per second.	Loss of Head in feet.	Hy. Gradient level in feet, above a datum 20 feet below mean sea level.
								54·42
0—1,250	1,250	11,755	12	1·63	1 in 430	2·10	2·91	51·51
1,250—2,350	1,100	7,164	10	1·00	„ 440	1·90	2·50	49·01
2,350—3,250	900	3,870	10	0·54	„ 1,370	0·70	0·65	48·36

No. 1—*contd.*

Starting from 22,600 feet on Main No. 7.
Ending at the Junction of St. Thome High Road and Cutcherry Road, Mylapore.
Total Length, 3,250 feet.
see Drawing No. 41.)

Supply at 50 gallons per head per day.					Supply at 25 gallons per head per day.				
Discharge in cubic feet per second.	Hydraulic Gradient.	Velocity in feet per second.	Loss of Head in feet.	Hy. Gradient level in feet, above a datum 20 feet below mean sea level.	Discharge in cubic feet per second.	Hydraulic Gradient.	Velocity in feet per second.	Loss of Head in feet.	Hy. Gradient level in feet, above a datum 20 feet below mean sea level.
				74·22					86·07
1·09	1 in 970	1·40	1·29		0·54	1 in 3,880	0·70	0·32	
				72·93					85·75
0·67	„ 990	1·20	1·11		0·33	„ 3,960	0·63	0·28	
				71·82					85·47
0·36	„ 3,080	0·46	0·23		0·17	„ 12,300	0·23	0·07	
				71·59					85·40

APPENDIX No. 2

YIELD AND SUPPLY OF WATER FROM EXISTING SOURCES.

Average present Supply in millions of cubic feet month by month each year including Evaporation and Percolation in Red Hills and Cholavaram Tanks, Irrigation—all estimated; and Consumption by Madras City as measured.

MONTH.	1	2	3	4
	Irrigation 1,500 millions of c. ft. from September to February and 544 millions of c. ft. from March to June.	Madras City Water-supply at 583 millions of c. ft. per year (at present provided during average years).	Evaporation and Percolation in Red Hills and Cholavaram Tanks at 9 feet vertically per year.	Total Supply per month (sum of Columns 1, 2 and 3).
January	250	49	136	435
February	250	48	137	435
March	136	48	137	321
April	136	49	136	321
May	136	48	137	321
June	136	49	136	321
July	*Nil.*	49	136	185
August	*Nil.*	49	137	186
September	250	49	136	435
October	250	48	137	435
November	250	49	136	435
December	250	48	137	435
Totals for each year in millions of c. ft. ...	2,044	583	1,638	4,265

Note.—These figures have been plotted as a dotted red curve on Plate No. 5. This curve shows that the available yield is insufficient to supply continuously the present demand for Madras *plus* the estimated requirements of irrigation. Records confirm this deduction, for irrigation supplies have had to be curtailed about every second year on the average.

APPENDIX No. 2.

YIELD AND SUPPLY OF WATER FROM EXISTING SOURCES.

	PAGES
Average present supply including evaporation, percolation, irrigation and consumption by Madras City	158
Estimated supply including evaporation, percolation, irrigation and consumption of Madras City at 75 gallons per head per day for a population of 660,000 ...	159
Estimated supply including evaporation, percolation, irrigation and consumption of Madras City at 25 gallons per head per day for a population of 660,000 ...	160
Estimated supply including evaporation, percolation and consumption of Madras City at 25 gallons per head per day for a population of 660,000, without irrigation ...	161
Estimated supply including evaporation, percolation and consumption of Madras City at 75 gallons per head per day for a population of 660,000, without irrigation ...	162
Yield of catchment area drainable to Red Hills Tank in millions of cubic feet, from 1890 to 1908	163—171

APPENDIX No. 2—*contd.*

YIELD AND SUPPLY OF WATER FROM EXISTING SOURCES.

Estimated Supply, in millions of cubic feet, to be provided month by month each year including Evaporation and Percolation from Red Hills and Cholavaram Tanks, Irrigation, and Consumption of Madras City at 25 gallons per head per day for a population of 660,000.

	1	2	3	4
MONTH.	Irrigation 1,500 millions of c. ft. from September to February and 544 millions of c. ft. from March to June.	Madras City Water-supply at 1,000 millions of c. ft. per year.	Evaporation and Percolation in Red Hills and Cholavaram Tanks at 9 feet vertically per year.	Total Supply per month (sum of Columns 1, 2 and 3).
January	250	84	136	470
February	250	83	137	470
March	136	83	137	356
April	136	84	136	356
May	136	83	137	356
June	136	83	137	356
July	*Nil*	84	136	220
August	*Nil*	83	137	220
September	250	83	136	469
October	250	84	136	470
November	250	83	136	469
December	250	83	137	470
Totals for each year in millions of c. ft....	2,044	1,000	1,638	4,682

Note.—These figures have been plotted as a full red curve on Plate No. 5. From this curve it will be seen that in a number of years the yield is not sufficient to furnish the supply. In such years irrigation will have to be curtailed to allow Madras City to obtain a full water-supply.

APPENDIX No. 2—*contd.*

YIELD AND SUPPLY OF WATER FROM EXISTING SOURCES.

Estimated Supply, in millions of cubic feet, to be provided month by month each year including Evaporation and Percolation from Red Hills and Cholavaram Tanks, Irrigation, and Consumption of Madras City at 75 gallons per head per day for a population of 660,000.

MONTH.	1 Irrigation 1,500 millions of c. ft. from September to February and 544 millions of c. ft. from March to June.	2 Madras City Water-supply at 3,000 millions of c. ft. per year.	3 Evaporation and Percolation in Red Hills and Cholavaram Tanks at 9 feet vertically per year.	4 Total Supply per month (sum of Columns 1, 2 and 3).
January	250	250	136	636
February	250	250	137	637
March	136	250	136	522
April	136	250	137	523
May	136	250	136	522
June	136	250	137	523
July	*Nil*	250	136	386
August	*Nil*	250	137	387
September	250	250	136	636
October	250	250	137	637
November	250	250	136	636
December	250	250	137	637
Totals for each year in millions of c. ft....	2,044	3,000	1,638	6,682

Note.—These figures have been plotted as a chain dot (—·····—·····—) red curve on Plate No. 5. From this curve it will be seen that without a very large storage reservoir, the yield is not sufficient to furnish the supply set out in the above table.

APPENDIX No. 2—*contd.*

YIELD AND SUPPLY OF WATER FROM EXISTING SOURCES.

Estimated Supply, in millions of cubic feet, to be provided month by month each year including Evaporation and Percolation from Red Hills and Cholavaram Tanks and Consumption of Madras City at 25 gallons per head per day for a population of 660,000, without irrigation.

MONTH.	1	2	3
	Madras City Water-supply at 1,000 millions of c ft. per year.	Evaporation and Percolation in Red Hills and Cholavaram Tanks at 9 feet vertically per year.	Total Supply per month (sum of Columns 1 and 2).
January	84	136	220
February	83	137	220
March	83	137	220
April	84	136	220
May	83	137	220
June	83	137	220
July	84	136	220
August	83	137	220
September	83	136	219
October	84	136	220
November	83	136	219
December	83	137	220
Totals for each year in millions of c. ft ...	1,000	1,638	2,638

Note.—These figures have been plotted as a broken red curve (— — —) on Plate No. 5. This curve shews that the available yield is ample to supply 25 gallons per head per day to a population of 660,000.

APPENDIX No. 2—*contd.*

YIELD AND SUPPLY OF WATER FROM EXISTING SOURCES.

Estimated Supply, in millions of cubic feet, to be provided month by month each year including Evaporation and Percolation from Red Hills and Cholavaram Tanks and Consumption of Madras City at 75 gallons per head per day for a population of 660,000, without irrigation.

MONTH.	1 Madras City Water-supply at 3,000 millions of c. ft. per year.	2 Evaporation and Percolation in Red Hills and Cholavaram Tanks at 9 feet vertically per year.	3 Total Supply per month (sum of Columns 1 and 2).
January	250	136	386
February	250	137	387
March	250	136	386
April	250	137	387
May	250	136	386
June	250	137	387
July	250	136	386
August	250	137	387
September	250	136	386
October	250	137	387
November	250	136	386
December	250	137	387
Totals for each year in millions of cubic feet ...	3,000	1,638	4,638

Note.—These figures have been plotted as a chain dot (—·······—) red curve on Plate No. 5. This curve shows that the available yield is insufficient to provide continuously 75 gallons per head per day for a population of 660,000 even if all irrigation be stopped.

APPENDIX No. 2—*contd.*

YIELD AND SUPPLY OF WATER FROM EXISTING SOURCES.

Yield of Catchment Area drainable to Red Hills Tank in millions of cubic feet, from 1890 to 1908.

YEAR AND MONTH.	1	2	3	4	5	6	7	8
	Quantity of Water turned down Channel from Tamarapakkam Anicut.	Overflow at Tamarapakkam Anicut.	Discharge of Catchment area above Tamarapakkam Anicut (sum of Columns 1 and 2).	Average Discharge from Catchment area below Tamarapakkam Anicut taken as 1/3·6 of yield above Tamarapakkam Anicut.	Total estimated Discharge of Catchment area drainable to Red Hills Tank (sum of Columns 3 and 4).	Progressive Total of Column 5.	Total available yield, *i.e.*, Water turned down Channel from Tamarapakkam Anicut *plus* discharge from area below Tamarapakkam Anicut.	Progressive Total of Column 7.
1890.								
January ...	782	37	819	228	1,047	1,047	1,010	1,010
February ...	532	...	532	148	680	1,727	680	1,690
March ...	410	...	410	114	524	2,251	524	2,214
April ...	285	...	285	79	364	2,615	364	2,578
May ...	193	...	193	54	247	2,862	247	2,825
June ...	347	...	347	96	443	3,305	443	3,268
July ...	541	...	541	150	691	3,996	691	3,959
August ...	568	6	574	159	733	4,729	727	4,686
September ...	435	330	765	213	978	5,707	648	5,334
October ...	407	22	429	119	548	6,255	526	5,860
November ...	752	2,576	3,328	924	4,252	10,507	1,676	7,536
December ...	241	30	271	75	346	10,853	316	7,852
Total for 1890 ...	5,493	3,001	8,494	2,359	10,853		7,852	
1891.								
January ...	121	...	121	34	155	11,008	155	8,007
February ...	36	...	36	10	46	11,054	46	8,053
March ...	16	...	16	4	20	11,074	20	8,073
April ...	...	...	...	...	...	11,074	...	8,073
May ...	...	...	...	...	...	11,074	...	8,073
June ...	...	...	...	...	...	11,074	...	8,073
July ...	6	...	6	1	7	11,081	7	8,080
August ...	...	...	...	...	...	11,081	...	8,080
September ...	234	149	383	107	490	11,571	341	8,421
October ...	538	140	678	188	866	12,437	726	9,147
November ...	218	5	223	62	285	12,722	280	9,427
December ...	186	122	308	86	394	13,116	272	9,699
Total for 1891 ...	1,355	416	1,771	492	2,263		1,847	
Totals to end of 1890.	5,493	3,001	8,494	2,359	10,853		7,852	
Progressive Totals from January, 1890.	6,848	3,417	10,265	2,851	13,116		9,699	

Note.—These figures have been used in plotting the yield curves on Plate No. 5.

APPENDIX No. 2—*contd.*

YIELD AND SUPPLY OF WATER FROM EXISTING SOURCES.

Yield of Catchment Area drainable to Red Hills Tank in millions of cubic feet, from 1890 to 1908.

YEAR AND MONTH.	1 Quantity of Water turned down Channel from Tamarapakkam Anicut.	2 Overflow at Tamarapakkam Anicut.	3 Discharge of Catchment area above Tamarapakkam Anicut (sum of Columns 1 and 2).	4 Average Discharge from Catchment area below Tamarapakkam Anicut taken as 1/3·6 of yield above Tamarapakkam Anicut.	5 Total estimated Discharge of Catchment area drainable to Red Hills Tank (sum of Columns 3 and 4).	6 Progressive Total of Column 5.	7 Total available yield, *i.e.*, Water turned down Channel from Tamarapakkam Anicut *plus* discharge from area below Tamarapakkam Anicut.	8 Progressive Total of Column 7.
1892.								
January ...	...	...	...	...	...	13,116	...	9,699
February ...	...	...	...	...	...	13,116	...	9,699
March ...	...	...	...	...	...	13,116	...	9,699
April ...	...	...	...	...	...	13,116	...	9,699
May ...	...	...	...	...	...	13,116	...	9,699
June ...	16	...	16	4	20	13,136	20	9,719
July ...	149	98	247	69	316	13,452	218	9,937
August ...	336	283	619	172	791	14,243	508	10,445
September ...	376	540	916	255	1,171	15,414	631	11,076
October ...	577	1,523	2,100	583	2,683	18,097	1,160	12,236
November ...	14	867	881	245	1,126	19,223	259	12,495
December ...	37	...	37	10	47	19,270	47	12,542
Total for 1892 ...	1,505	3,311	4,816	1,338	6,154		2,843	
Totals to end of 1891.	6,848	3,417	10,265	2,851	13,116		9,699	
Progressive Totals from January, 1890...	8,353	6,728	15,081	4,189	19,270		12,542	
1893.								
January ...	...	...	...	...	...	19,270	...	12,542
February ...	9	...	9	3	12	19,282	12	12,554
March ...	...	...	...	...	...	19,282	...	12,554
April ...	29	...	29	8	37	19,319	37	12,591
May ...	...	...	...	...	...	19,319	...	12,591
June ...	1	...	1	...	1	19,320	1	12,592
July ...	...	...	...	...	...	19,320	...	12,592
August ...	...	...	...	...	...	19,320	...	12,592
September ...	...	...	...	...	...	19,320	...	12,592
October ...	150	...	150	42	192	19,512	192	12,784
November ...	1,589	10,398	11,987	3,330	15,317	34,829	4,919	17,703
December ...	44	175	219	60	279	35,108	104	17,807
Total for 1893 ...	1,822	10,573	12,395	3,443	15,838		5,265	
Totals to end of 1892.	8,353	6,728	15,081	4,189	19,270		12,542	
Progressive Totals from January, 1890...	10,175	17,301	27,476	7,632	35,108		17,807	

Note.—These figures have been used in plotting the yield curves on Plate No. 5.

APPENDIX No. 2—*contd.*

YIELD AND SUPPLY OF WATER FROM EXISTING SOURCES.

Yield of Catchment Area drainable to Red Hills Tank in millions of cubic feet, from 1890 tn 1908.

YEAR AND MONTH.	1	2	3	4	5	6	7	8
	Quantity of Water turned down Channel from Tamarapakkam Anicut.	Overflow at Tamarapakkam Anicut	Discharge of Catchment area above Tamarapakkam Anicut (sum of Columns 1 and 2).	Average Discharge from Catchment area below Tamarapakkam Anicut taken as 1/3·6 of yield above Tamarapakkam Anicut.	Total estimated Discharge of Catchment area drainable to Red Hills Tank (sum of Columns 3 and 4).	Progressive Total of Column 5.	Total available yield, *i.e.*, Water turned down Channel from Tamarapakkam Anicut *plus* discharge from area below Tamarapakkam Anicut.	Progressive Total of Column 7.
1894.								
January ...	...	...	...	...	...	35,108	...	17,807
February ...	...	...	...	...	...	35,108	...	17,807
March ...	...	...	...	...	...	35,108	...	17,807
April ...	...	...	...	...	...	35,108	...	17,807
May ...	...	...	...	...	...	35,108	...	17,807
June ...	...	...	...	...	...	35,108	...	17,807
July ...	...	...	...	...	...	35,108	...	17,807
August ...	40	...	40	11	51	35,159	51	17,858
September ...	76	...	76	21	97	35,256	97	17,955
October ...	260	151	411	114	525	35,781	374	18,329
November ...	137	337	474	132	606	36,387	269	18,598
December ...	42	225	267	74	341	36,728	116	18,714
Total for 1894 ...	555	713	1,268	352	1,620		907	
Totals to end of 1893.	10,175	17,301	27,476	7,632	35,108		17,807	
Progressive Totals from January, 1890.	10,730	18,014	28,744	7,984	36,728		18,714	
1895.								
January ...	52	802	854	237	1,091	37,819	289	19,003
February ...	...	...	...	...	...	37,819	...	19,003
March ...	...	...	...	...	...	37,819	...	19,003
April ...	...	...	...	...	...	37,819	...	19,003
May ...	...	...	...	...	...	37,819	..	19,003
June ..	...	...	...	...	...	37,819	...	19,003
July ...	...	...	...	...	...	37,819	...	19,003
August ...	2	...	2	1	3	37,822	3	19,006
September ...	57	..	57	16	73	37,895	73	19,079
October ...	1,420	207	1,627	452	2,079	39,974	1,872	20,951
November ...	414	311	725	201	926	40,900	615	21,566
December ...	...	3,417	3,417	949	4,366	45,266	949	22,515
Total for 1895 ...	1,945	4,737	6,682	1,856	8,538		3,801	
Totals to end of 1894.	10,730	18,014	28,744	7,984	36,728		18,714	
Progressive Totals from January, 1890.	12,675	22,751	35,426	9,840	45,266		22,515	

Note.—These figures have been used in plotting the yield curves on Plate No. 5.

APPENDIX No. 2—*contd.*

YIELD AND SUPPLY OF WATER FROM EXISTING SOURCES.

Yield of Catchment Area drainable to Red Hills Tank in millions of cubic feet, from 1890 to 1908.

YEAR AND MONTH.	1 Quantity of Water turned down Channel from Tamara-pakkam Anicut.	2 Overflow at Tamara-pakkam Anicut.	3 Discharge of Catchment area above Tamara-pakkam Anicut (sum of Columns 1 and 2).	4 Average Discharge from Catchment area below Tamara-pakkam Anicut taken as 1/3·6 of yield above Tamarapak-kam Anicut.	5 Total estimated Discharge of Catchment area drain-able to Red Hills Tank (sum of Columns 3 and 4).	6 Progressive Total of Column 5.	7 Total available yield, *i.e.*, Water turned down Channel from Tamarapak-kam Anicut *plus* discharge from area below Tamarapak-kam Anicut.	8 Progressive Total of Column 7.
1896.								
January ...	5	202	207	58	265	45,531	63	22,578
February ...	...	...	...	...	...	45,531	...	22,578
March ...	...	...	...	...	...	45,531	...	22,578
April ...	...	...	...	...	...	45,531	...	22,578
May ...	...	...	...	...	...	45,531	...	22,578
June ...	...	...	...	...	...	45,531	...	22,578
July ...	...	...	...	...	...	45,531	...	22,578
August ...	...	...	...	...	...	45,531	...	22,578
September ...	27	...	27	7	34	45,565	34	22,612
October ...	...	...	...	...	...	45,565	...	22,612
November ...	222	3,644	3,866	1,074	4,940	50,505	1,296	23,908
December ...	...	2,850	2,850	792	3,642	54,147	792	24,700
Total for 1896 ...	254	6,696	6,950	1,931	8,881		2,185	
Totals to end of 1895.	12,675	22,751	35,426	9,840	45,266		22,515	
Progressive Totals from January, 1890.	12,929	29,447	42,376	11,771	54,147		24,700	
1897.								
January ...	34	969	1,003	279	1,282	55,429	313	25,013
February ...	7	..	7	2	9	55,438	9	25,022
March ...	...	...	...	...	...	55,438	...	25,022
April ...	...	...	...	...	...	55,438	...	25,022
May ...	...	...	...	...	...	55,438	...	25,022
June ...	...	...	..	...	...	55,438	...	25,022
July ...	...	...	...	..	...	55,438	...	25,022
August ...	74	8	82	23	105	55,543	97	25,119
September ...	477	2,026	2,503	695	3,198	58,741	1,172	26,291
October ...	70	1,040	1,110	308	1,418	60,159	378	26,669
November ...	113	118	231	64	295	60,454	177	26,846
December ...	22	...	22	6	28	60,482	28	26,874
Total for 1897 ...	797	4,161	4,958	1,377	6,335		2,174	
Totals to end of 1896.	12,929	29,447	42,376	11,771	54,147		24,700	
Progressive Totals from January, 1890.	13,726	33,608	47,334	13,148	60,482		26,874	

Note.—These figures have been used in plotting the yield curves on Plate No. 5.

APPENDIX No. 2—*contd.*

YIELD AND SUPPLY OF WATER FROM EXISTING SOURCES.

Yield of Catchment Area drainable to Red Hills Tank in millions of cubic feet, from 1890 to 1908.

YEAR AND MONTH.	1 Quantity of Water turned down Channel from Tamarapakkam Anicut.	2 Overflow at Tamarapakkam Anicut.	3 Discharge of Catchment area above Tamarapakkam Anicut (sum of Columns 1 and 2).	4 Average Discharge from Catchment area below Tamarapakkam Anicut taken as 1/3·6 of yield above Tamarapakkam Anicut.	5 Total estimated Discharge of Catchment area drainable to Red Hills Tank (sum of Columns 3 and 4).	6 Progressive Total of Column 5.	7 Total available yield, *i.e.*, Water turned down Channel from Tamarapakkam Anicut *plus* discharge from area below Tamarapakkam Anicut.	8 Progressive Total of Column 7.
1898.								
January ...	8	...	8	2	10	60,492	10	26,884
February ...	...	...	...	...	...	60,492	...	26,884
March ...	...	...	...	...	...	60,492	...	26,884
April ...	...	...	...	...	...	60,492	...	26,884
May ...	...	...	...	...	...	60,492	...	26,884
June ...	3	...	3	...	3	60,495	3	26,887
July ...	...	...	...	...	...	60,495	...	26,887
August ...	...	...	...	...	...	60,495	...	26,887
September ...	324	488	812	226	1,038	61,533	550	27,437
October ...	195	622	817	227	1,044	62,577	422	27,859
November ...	115	9,067	9,182	2,550	11,732	74,309	2,665	30,524
December ...	257	5,265	5,522	1,534	7,056	81,365	1,791	32,315
Total for 1898 ...	902	15,442	16,344	4,539	20,883		5,441	
Totals to end of 1897.	13,726	33,608	47,334	13,148	60,482		26,874	
Progressive Totals from January 1890.	14,628	49,050	63,678	17,687	81,365		32,315	
1899.								
January ...	297	102	399	111	510	81,875	408	32,723
February ...	276	...	276	76	352	82,227	352	33,075
March ...	110	...	110	31	141	82,368	141	33,216
April ...	186	...	186	52	238	82,606	238	33,454
May ...	190	...	190	53	243	82,849	243	33,697
June ...	122	...	122	34	156	83,005	156	33,853
July ...	105	...	105	29	134	83,139	134	33,987
August ...	89	...	89	25	114	83,253	114	34,101
September ...	411	...	2,299	638	2,937	86,190	1,049	35,156
October ...	211	1,888	3,552	987	4,539	90,729	1,198	36,348
November ...	134	3,341	1,444	401	1,845	92,574	535	36,883
December ...	237	1,310	237	66	303	92,877	303	37,186
Total for 1899 ...	2,368	6,641	9,009	2,503	11,512		4,871	
Totals to end of 1898.	14,628	49,050	63,678	17,687	81,365		32,315	
Progressive Totals from January, 1890.	16,996	55,691	72,687	20,190	92,877		37,186	

Note.—These figures have been used in plotting the yield curves on Plate No. 5.

APPENDIX No. 2—*contd.*

YIELD AND SUPPLY OF WATER FROM EXISTING SOURCES.

Yield of Catchment Area drainable to Red Hills Tank in millions of cubic feet from 1890 to 1908.

YEAR AND MONTH.	1 Quantity of Water turned down Channel from Tamarapakkam Anicut.	2 Overflow at Tamara pakkam Anicut.	3 Discharge of Catchment area above Tamarapakkam Anicut (sum of Columns 1 and 2).	4 Average Discharge from Catchment area below Tamarapakkam Anicut taken as 1/3·6 of yield above Tamarapakkam Anicut.	5 Total estimated Discharge of Catchment area drainable to Red Hills Tank (sum of Columns 3 and 4).	6 Progressive Total of Column 5.	7 Total available yield, *i.e.*, Water turned down Channel from Tamarapakkam Anicut *plus* discharge from area below Tamarapakkan Anicut.	8 Progressive Total of Column 7.
1900.								
January ...	211	...	211	59	270	93,147	270	37,456
February ...	87	...	87	24	111	93,258	111	37,567
March ...	90	...	90	25	115	93,373	115	37,682
April ...	79	...	79	22	101	93,474	101	37,782
May ...	109	...	109	30	139	93,613	139	37,922
June ...	52	...	52	15	67	93,680	67	37,989
July ...	18	...	18	5	23	93,703	23	38,012
August ...	51	...	51	15	66	93,769	66	38,078
September ...	123	...	123	34	157	93,926	157	38,235
October ...	180	48	228	63	291	94,217	243	38,478
November ...	206	...	206	57	263	94,480	263	38,741
December ...	231	26	257	71	328	94,808	302	39,043
Total for 1900 ...	1,437	74	1,511	420	1,931		1,857	
Totals to end of 1899.	16,996	55,691	72,687	20,190	92,877		37,186	
Progressive Totals from January, 1890.	18,433	55,765	74,198	20,610	94,808		39,043	
1901.								
January ...	150	...	150	42	192	95,000	192	39,235
February ...	131	...	131	36	167	95,167	167	39,402
March ...	97	...	97	27	124	95,291	124	39,526
April ...	...	...	...	...	...	95,291	...	39,526
May ...	...	...	...	...	...	95,291	...	39,526
June ...	...	...	...	...	...	95,291	...	39,526
July ...	...	...	...	...	...	95,291	...	39,526
August ...	102	...	102	29	131	95,422	131	39,657
September ...	212	...	212	59	271	95,693	271	39,928
October ...	198	...	198	55	253	95,946	253	40,181
November ...	333	473	806	224	1,030	96,976	557	40,738
December ...	274	14,641	14,915	4,142	19,057	116,033	4,416	45,154
Total for 1901 ...	1,497	15,114	16,611	4,614	21,225		6,111	
Totals to end of 1900.	18,433	55,765	74,198	20,610	94,808		39,043	
Progressive Totals from January, 1890.	19,930	70,879	90,809	25,224	116,033		45,154	

Note.—These figures have been used in plotting the yield curves on Plate No. 5.

APPENDIX No. 2—*contd.*

YIELD AND SUPPLY OF WATER FROM EXISTING SOURCES.

Yield of Catchment Area drainable to Red Hills Tank in millions of cubic feet, from 1890 to 1908.

YEAR AND MONTH.	1	2	3	4	5	6	7	8
	Quantity of Water turned down Channel from Tamarapakkam Anicut.	Overflow at Tamarapakkam Anicut.	Discharge of Catchment area above Tamarapakkam Anicut (sum of Columns 1 and 2).	Average Discharge from Catchment area below Tamarapakkam Anicut taken as 1/3·6 of yield above Tamarapakkam Anicut.	Total estimated Discharge of Catchment area drainable to Red Hills Tank (sum of Columns 3 and 4).	Progressive Total of Column 5.	Total available yield, *i.e.*, Water turned down Channel from Tamarapakkam Anicut *plus* discharge from area below Tamarapakkam Anicut.	Progressive Total of Column 7.
1902.								
January ...	322	...	322	89	411	116,444	411	45,565
February ...	234	...	234	65	299	116,743	299	45,864
March ...	177	...	177	49	226	116,969	226	46,090
April ...	132	...	132	37	169	117,138	169	46,259
May ...	...	...	...	...	...	117,138	...	46,259
June ...	...	...	...	...	...	117,138	...	46,259
July ...	...	...	...	...	...	117,138	...	46,259
August ...	174	47	221	62	283	117,421	236	46,495
September ...	469	620	1,089	302	1,391	118,812	771	47,266
October ...	312	3,367	3,679	1,022	4,701	123,513	1,334	48,600
November ...	89	3,444	3,533	982	4,515	128,028	1,071	49,671
December ...	276	2,925	3,201	889	4,090	132,118	1,165	50,836
Total for 1902 ...	2,185	10,403	12,588	3,497	16,085		5,682	
Totals to end of 1901.	19,930	70,879	90,809	25,224	116,033		45,154	
Progressive Totals from January, 1890.	22,115	81,282	103,397	28,721	132,118		50,836	
1903.								
January ...	193	983	1,176	327	1,503	133,621	520	51,356
February ...	194	...	194	54	248	133,869	248	51,604
March ...	266	...	266	74	340	134,209	340	51,944
April ...	177	...	177	49	226	134,435	226	52,170
May ...	188	200	388	108	496	134,931	296	52,466
June ...	187	...	187	52	239	135,170	239	52,705
July ...	230	...	230	64	294	135,464	294	52,999
August ...	243	...	243	68	311	135,775	311	53,310
September ...	297	1,318	1,615	449	2,064	137,839	746	54,056
October ...	101	4,116	4,217	1,171	5,388	143,227	1,272	55,328
November ...	116	17,177	17,293	4,803	22,096	165,323	4,919	60,247
December ...	295	12,411	12,706	3,529	16,235	181,558	3,824	64,071
Total for 1903 ...	2,487	36,205	38,692	10,748	49,440		13,235	
Totals to end of 1902.	22,115	81,282	103,397	28,721	132,118		50,836	
Progressive Totals from January, 1890.	24,602	117,487	142,089	39,469	181,558		64,071	

Note.—These figures have been used in plotting the yield curves on Plate No. 5.

APPENDIX No. 2—*contd.*

YIELD AND SUPPLY OF WATER FROM EXISTING SOURCES.

Yield of Catchment Area drainable to Red Red Hills Tank in millions of cubic feet, from 1890 to 1908.

YEAR AND MONTH.	1 Quantity of Water turned down Channel from Tamarapakkam Anicut.	2 Overflow at Tamarapakkam Anicut.	3 Discharge of Catchment area above Tamarapakkam Anicut (sum of Columns 1 and 2).	4 Average Discharge from Catchment area below Tamarapakkam Anicut taken as 1/3·6 of yield above Tamarapakkam Anicut.	5 Total estimated Discharge of Catchment area drainable to Red Hills Tank (sum of Columns 3 and 4).	6 Progressive Total of Column 5.	7 Total available yield, *i.e.*, Water turned down Channel from Tamarapakkam Anicut *plus* discharge from area below Tamarapakkam Anicut.	8 Progressive Total of Column 7.
1904.								
January ...	255	4,923	5,178	1,438	6,616	188,175	1,693	65,764
February ...	314	...	314	87	401	188,576	401	66,165
March ...	293	...	293	81	374	188,950	374	66,539
April ...	195	...	195	54	249	189,199	249	66,788
May ...	171	...	171	48	219	189,418	219	67,007
June ...	180	...	180	50	230	189,648	230	67,237
July ...	171	...	171	48	219	189,867	219	67,456
August ...	159	...	159	44	203	190,070	203	67,659
September ...	140	...	140	39	179	190,249	179	67,838
October ...	267	81	348	97	445	190,694	364	68,202
November ...	158	...	158	44	202	190,896	202	68,404
December ...	47	...	47	13	60	190,956	60	68,464
Total for 1904 ...	2,350	5,004	7,354	2,043	9,397		4,393	
Totals to end of 1903.	24,602	117,487	142,089	39,469	181,558		64,071	
Progressive Totals from January, 1890.	26,952	122,491	149,443	41,512	190,955		68,464	
1905.								
January ...	60	...	60	17	77	191,033	77	68,541
February ...	...	...	...	...	...	191,033	...	68,541
March ...	...	...	...	...	...	191,033	...	68,541
April ...	18	...	18	5	23	191,056	23	68,564
May ...	...	...	...	...	...	191,056	...	68,541
June ...	...	...	...	...	...	191,056	...	68,541
July ...	...	...	...	...	...	191,056	...	68,541
August ...	154	...	154	43	197	191,253	197	68,761
September ...	107	...	107	28	135	191,388	135	68,896
October ...	714	1,685	2,399	667	3,066	194,454	1,381	70,277
November ...	402	...	402	112	514	194,968	514	70,791
December ...	230	...	230	64	294	195,262	294	71,085
Total for 1905 ...	1,685	1,685	3,370	936	4,306		2,621	
Totals to end of 1904.	26,952	122,491	149,443	41,512	190,955		68,464	
Progressive Totals from January, 1890.	28,637	124,176	152,813	42,448	195,261		71,085	

Note.—These figures have been used in plotting the yield curves on Plate No. 5.

APPENDIX No. 2—*contd.*

YIELD AND SUPPLY OF WATER FROM EXISTING SOURCES.

Yield of Catchment Area drainable to Red Hills Tank in millions of cubic feet, from 1890 to 1908.

	1	2	3	4	5	6	7	8
YEAR AND MONTH.	Quantity of Water turned down Channel from Tamarapakkam Anicut.	Overflow at Tamarapakkam Anicut.	Discharge of Catchment area above Tamarapakkam Anicut (sum of Columns 1 and 2).	Average Discharge from Catchment area below Tamarapakkam Anicut taken as 1/3·6 of yield above Tamarapakkam Anicut	Total estimated Discharge of Catchment area drainable to Red Hills Tank (sum of Columns 3 and 4).	Progressive Total of Column 5.	Total available yield, *i.e.*, Water turned down Channel from Tamarapakkam Anicut *plus* discharge from area below Tamarapakkam Anicut.	Progressive Total of Column 7.
1906.								
January ...	695	3,802	4,497	1,249	5,746	201,007	1,944	73,029
February ...	273	...	273	75	348	201,355	348	73,377
March ...	178	...	178	49	227	201,582	227	73,604
April ...	...	...	...	...	...	201,582	...	73,604
May ...	...	...	...	...	...	201,582	...	73,604
June ...	...	...	...	...	...	201,582	...	73,604
July ...	8	...	8	2	10	201,592	10	73,614
August ...	834	252	1,086	303	1,389	202,981	1,137	74,551
September ...	406	28	434	121	555	203,536	527	75,278
October ...	305	...	305	85	390	203,926	390	75,668
November ...	443	...	443	123	566	204,492	566	76,234
December ...	329	1,976	2,305	640	2,945	207,437	969	77,203
Total for 1906 ...	3,471	6,058	9,529	2,647	12,176		6,118	
Totals to end of 1905.	28,637	124,176	152,813	42,448	195,261		71,085	
Progressive Totals from January, 1890.	32,108	130,234	162,342	45,095	207,437		77,203	
1907.								
January ...	263	372	635	176	811	208,248	439	77,642
February ...	273	...	273	75	348	208,596	348	77,990
March ...	240	...	240	66	306	208,902	306	78,296
April ...	8	...	8	2	10	208,912	10	78,306
May ...	3	...	3	1	4	208,916	4	78,310
June ...	10	...	10	2	12	208,928	12	78,322
July ...	12	...	12	3	15	208,943	15	78,337
August ...	7	...	7	1	8	208,951	8	78,345
September ...	6	...	6	1	7	208,958	7	78,352
October ...	61	...	61	16	77	209,035	77	78,429
November ...	330	301	631	175	806	209,841	505	78,934
December ...	577	222	799	228	1,027	210,868	805	79,739
Total for 1907 ...	1,790	895	2,685	746	3,431		2,536	
Totals to end of 1906.	32,108	130,234	162,342	45,095	207,437		77,203	
Progressive Totals from January, 1890.	33,898	131,129	165,027	45,841	210,868		79,739	

Note.—These figures have been used in plotting the yield curves on Plate No. 5.

APPENDIX No. 2—*contd.*

YIELD AND SUPPLY OF WATER FROM EXISTING SOURCES.

Yield of Catchment Area drainable to Red Hills Tank in millions of cubic feet, from 1890 to 1908.

YEAR AND MONTH.	1. Quantity of Water turned down Channel from Tamarapakkam Anicut.	2. Overflow at Tamarapakkam Anicut.	3. Discharge of Catchment area above Tamarapakkam Anicut (sum of Columns 1 and 2).	4. Average Discharge from Catchment area below Tamarapakkam Anicut taken as 1/3·6 of yield above Tamarapakkam Anicut.	5. Total estimated Discharge of Catchment area drainable to Red Hills Tank (sum of Columns 3 and 4).	6. Progressive Total of Column 5.	7. Total available yield, *i.e.*, Water turned down Channel from Tamarapakkam Anicut *plus* discharge from area below Tamarapakkam Anicut.	8. Progressive Total of Column 7.
1908.								
January ...	...	...	...	...	...	210,868	...	79,739
February ...	...	...	...	...	...	210,868	...	79,739
March ...	...	...	...	...	...	210,868	...	79,739
April ...	...	...	...	...	...	210,868	...	79,739
May ...	...	...	...	...	...	210,868	...	79,739
June ...	...	...	...	...	...	210,868	...	79,739
July ...	...	...	...	...	...	210,868	...	79,739
August ...	6	...	6	2	8	210,876	8	79,747
September ...	165	6	171	48	219	211,095	213	79,960
October ...	327	2,427	2,754	765	3,519	214,614	1,092	81,052
November ...	213	2,236	2,449	680	3,129	217,743	893	81,945
December ...	105	...	105	29	134	217,877	134	82,079
Total for 1898 ...	816	4,669	5,485	1,524	7,009		2,340	
Totals to end of 1907.	33,898	131,129	165,027	45,841	210,868		79,739	
Progressive Totals from January, 1890.	34,714	135,798	170,512	47,365	217,877		82,079	

Note.—These figures have been used in plotting the yield curves on Plate No. 5.

APPENDIX No. 3.

TABLES SHOWING WATER SURFACES, AREAS AND CUBICAL CONTENTS AT HALF FEET VERTICAL INTERVALS.

	PAGES
Red Hills Tank	174 and 175
Cholavaram Tank	176 „ 177

APPENDIX

Red Hills

Table showing Water Surface, Areas and Cubical Contents at on the Madras Water-supply and

Height above Mean Sea Level.		Difference of Area for each half foot.	Area at Level in Column 1.	Difference of Cubical Contents at each half foot.	Contents at Level in Column 1.
1		2	3	4	5
G. T. S. DATUM. FEET.	P. W. D. DATUM. FEET.	MILLION SQ. FT.	MILLION SQ. FT.	MILLION C. FT.	MILLION C. FT.
23·36	23·67		25·503		25·5015
		3·847		13·6970	
23·86	24·17		29·350		39·1985
		4·117		15·6873	
24·36	24·67		33·467		54·8858
		4·387		17·8125	
24·86	25·17		37·854		72·6983
		4·657		20·0729	
25·36	25·67		42·511		92·7712
		4·927		22·4682	
25·86	26·17		47·438		115·2394
		5·197		24·9987	
26·36	26·67		52·635		140·2381
		2·160		26·8557	
26·86	27·17		54·795		167·0938
		2·203		27·9465	
27·36	27·67		56·998		195·0403
		2·247		29·0590	
27·86	28·17		59·245		224·0993
		2·290		30·1932	
28·36	28·67		61·535		254·2925
		2·334		31·3491	
28·86	29·17		63·869		285·6416
		2·377		32·5267	
29·36	29·67		66·246		318·1683
		3·459		33·7912	
29·86	30·17		69·705		351·9595
		3·548		35·5329	
30·36	30·67		73·253		387·4924
		3·635		37·3184	
30·86	31·17		76·888		424·8108
		3·723		39·1477	
31·13	**Lowest Draw-off with new Works.**				450·0
31·36	31·67		80·611		463·9585
		3·811		41·0208	
31·86	32·17		84·422		504·9793
		3·899		42·9377	
32·36	32·67		88·321		547·9170
		3·580		45·0528	
32·86	33·17		91·901		592·9698
		3·651		46·7604	
33·36	33·67		95·552		639·7302
		3·722		48·5036	
33·86	34·17		99·274		688·2338
		3·792		50·2824	
34·36	34·67		103·066		738·5162
		3·864		52·0968	
34·86	35·17		106·930		790·6130
		3·935		53·9468	
35·36	35·67		110·865		844·5598
		4·177		56·4762	
35·86	36·17		115·042		901·0360
		4·255		58·5842	
36·36	36·67		119·297		959·6202

Note.—**Plate No. 8 shows graphically the contents**

No. 3.

Tank.

half foot vertical interval (mainly extracted from "Monograph Irrigation Project," dated June, 1882.)

Height above Mean Sea Level.		Difference of Area for each half foot.	Area at Level in Column 1.	Difference of Cubical Contents at each half foot.	Contents at Level in Column 1.
1		2	3	4	5
G. T. S. DATUM. FEET.	P. W. D. DATUM. FEET.	MILLION SQ. FT.	MILLION SQ. FT.	MILLION C. FT.	MILLION C. FT.
		4·332		60·7308	
36·86	37·17		123·629		1,020·3510
		4·409		62·9160	
37·36	37·67		128·038		1,083·2670
		4·486		65·1398	
37·69	**Present Lowest Level for issue of Irrigation Water also Level at which Pumping Starts with Existing Works.**				1,120·0
37·86	38·17		132·524		1,148·4068
		4·564		67·4022	
38·36	38·67		137·088		1,215·8090
		3·542		69·4592	
38·86	39·17		140·630		1,285·2682
		3·587		71·2414	
39·19	**Proposed Lowest Level for issue of Irrigation Water.**				1,320·0
39·36	39·67		144·217		1,356·5096
		3·631		73·0462	
39·86	40·17		147·848		1,429·5558
		3·676		74·8736	
40·36	40·67		151·524		1,504·4294
		3·721		76·7236	
40·86	41·17		155·245		1,581·1530
		3·767		78·5962	
41·36	41·67		159·012		1,659·7492
		2·835		80·1173	
41·86	42·17		161·847		1,739·8665
		2·859		81·5407	
42·36	42·67		164·706		1,821·4072
		2·884		82·9766	
42·86	43·17		167·590		1,904·3838
		2·910		84·4250	
43·36	43·67		170·500		1,988·8088
		2·934		85·8859	
43·86	44·17		173·434		2,074·6947
		2·960		87·3593	
44·36	44·67	**Present F. T. L.**	176·394		2,162·0540
		5·723		89·6239	
44·86	45·17		182·117		2,251·6779
		5·815		92·5083	
45·36	45·67		187·932		2,344·1862
		5·906		95·4841	
45·86	46·17	**Proposed F. T. L.**	193·838		2,439·6703
		5·997		98·5513	
46·36	46·67		199·835		2,538·2216
		6·088		101·5098	
46·86	47·17		205·923		2,639·9314
		6·180		104·9597	
47·36	47·67	**Proposed top of earth bund—18 inches above proposed F.T.L.**	212·103		2,744·8911

of Red Hills Tank at different levels.

APPENDIX

Cholavaram

Table showing Water Surface, Areas and Cubical Contents at on the Madras Water-supply and

Height above Mean Sea Level.		Difference of Area for each half foot.	Area at Level in Column 1.	Difference of Cubical Contents each half foot.	Contents at Level in Column 1.
1		2	3	4	5
G. T. S. DATUM. FEET.	P. W. D. DATUM. FEET.	MILLION SQ. FT.	MILLION SQ. FT.	MILLION C. FT.	MILLION C. FT
44·73	45·04	1·147	17·415	9·000	26·123
45·23	45·54	1·183	18·562	9·583	35·123
45·73	46·04	1·221	19·745	10·184	44·706
46·23	46·54	1·257	20·966	10·803	54·890
46·33	**Sill of Head Sluice to Red Hills Tank.**				
46·73	47·04	1·293	22·223	11·441	65·693
47·23	47·54	1·331	23·516	12·096	77·134
47·73	48·04	1·284	24·847	12·743	89·230
48·23	48·54	1·317	26·131	13·394	101·973
48·73	49·04	1·349	27·448	14·060	115·367
49·23	49·54	1·382	28·797	14·743	129·427
49·73	50·04	1·414	30·179	15·442	144·170
50·23	50·54	1·447	31·593	16·157	159·612
50·73	51·04	1·241	33·040	16·829	175·769
51·23	51·54	1·263	34·281	17·455	192·598
51·73	52·04	1·286	35·544	18·092	210·053
52·23	52·54	1·309	36·830	18·741	228·145
52·73	53·04	1·332	38·139	19·401	246·886
53·23	53·54	1·354	39·471	20·073	266·287
53·73	54·04		40·825		286·360

No. 3—*contd.*

Tank.

half foot vertical intervals (mainly extracted from "Monograph Irrigation Project," dated June, 1882.)

Height above Mean Sea Level.		Difference of Area for each half foot.	Area at Level in Column 1.	Difference of Cubical Contents each half foot.	Contents at Level in Column 1.
1		2	3	4	5
G. T. S. DATUM. FEET.	P. W. D. DATUM. FEET.	MILLION SQ. FT.	MILLION SQ. FT.	MILLION C. FT.	MILLION C. FT.
		1·194		20·710	
54·23	54·54		42·019		307·070
		1·211		21·311	
54·73	55·04		43·230		328·381
		1·228		21·920	
55·23	55·54		44·458		350·301
		1·245		22·538	
55·73	56·04		45·703		372·839
		1·262		23·165	
56·23	56·54		46·965		396·005
		1·279		23·800	
56·73	57·04		48·244		419·804
		1·532		24·502	
57·23	57·54		49·776		444·306
		1·556		25·273	
57·73	58·04		51·332		469·579
		1·580		26·058	
58·23	58·54		52·912		495·637
		1·604		26·854	
58·73	59·04		54·516		522·491
		1·628		27·661	
59·23	59·54		56·144		550·152
		1·651		28·481	
59·73	60·04	**Present F. T. L.**	57·795		578·633
		1·520		29·277	
60·23	60·54		59·315		607·910
		1·539		30·071	
60·73	61·04		60·854		637·981
		1 559		30·875	
61·23	61·54		62·413		668·856
		1·579		31·689	
61·73	62 04		63·992		700·545
		1·599		32·513	
62·23	62·54		65·591		733·058
		1·619		33·347	
62·73	63·04		67·210		766·405

APPENDIX No. 4.

DATA AND FIGURES TO SHOW EFFECT OF PROPOSED RAISING OF BOTH F. T. L. AND LOWEST LEVEL OF IRRIGATION DURING THE FAILURE OF MONSOON.

	PAGES
Years 1899—1901	180—183
„ 1904—1906	184—187

APPENDIX

Data and Figures to show effect of proposed raising of both F. T. L. (when the Monsoon failed) on (1) Periods of Pumping for Madras City (These Figures have been plotted graphically on

YEAR AND MONTH.	1	2		3		4	
	Receipts.	Issues including Evaporation and Percolation.		Excess of issues over receipt.		Progressive Total of Column 3.	
1899.							
December ...	303	438		135		135	
1900.							
January ...	270	438		168		303	
February ...	111	438		327		630	
March ...	115	324		209		839	
April ...	101	324		223		1,062	
May ...	139	324		185		1,247	
June ...	67	324		257		1,504	
July ...	23	88		65		1,569	
						With existing condition.	With levels raised as proposed.
25th August ...	55	149		94		1,663	
		Existing conditions.	With levels raised as proposed.	Existing conditions.	With levels raised as proposed.		
31st August ...	11	25	133	14	122	1,677	1,691
8th September ...	41	...	125	...	84	1,679	1,775
30th September ...	157	159	138	+2	22	1,663	1,797
6th October ...	44	30	22	—14	—22	...	1,775
31st October ...	199	199	199	...	...	...	...
November ...	263	263	263	...	...	...	...
December ...	302	302	302	...	...	...	...
1901.							
January ...	192	192	192	...	...	...	...
February ...	167	167	167	...	...	1,663	1,775
March ...	124	159	159	35	35	1,698	1,810
April ...	...	159	159	159	159	1,857	1,969
May ...	...	159	159	159	159	2,016	2,128
June ...	...	159	159	159	159	2,175	2,287
July ...	...	159	159	159	159	2,334	2,446
August ...	131	159	159	28	28	2,362	2,474

No. 4.

and lowest level of irrigation by 18 inches during the years 1899—1901 Water-supply ; (2) Periods of Cut-off of Irrigation Supply. Plate No. 10.)

5		6
Level in Red Hills Lake.		Remarks.
With Existing Level.	If F. T. L. and lowest level of irrigation raised 18 inches.	
44·00	47·36	F. T. L. + Bund 18 inches high.
43·80	47·36	350 million cubic feet supplied from Cholavaram Tank.
42·40	46·00	
42·90	44·90	
41·80	43·60	
40·60	42·50	
38·86	40·90	
38·40	40·40	
37·69	...	25th August, 1900, Irrigation stopped (existing levels).
37·60	39·70	
...	39·19	8th September, 1900, Irrigation stopped (proposed levels).
37·60	38·90	
37·69	39·19	6th October, 1900, Irrigation starts (with existing levels and proposed levels).
...	...	
...	...	
...	...	
...	...	
37·69	39·19	1st March, Irrigation stopped with existing levels and proposed levels.
37·40	38·86	
36·10	36·90	
33·80	36·40	
33·30	35·10	30th June, lowest draw-off level (with 2 feet head) in new scheme with existing levels.
31·20	33·40	
30·90	33·13	31st August, lowest draw-off, with 2 feet head, in new scheme.

APPENDIX

Data and Figures to show effect of proposed raising of both F. T. L. (when the Monsoon failed) on (1) Periods of Pumping for Madras City (These Figures have been plotted graphically on

YEAR AND MONTH.	1	2		3		4	
	Receipts.	Issues including Evaporation and Percolation.		Excess of issues over receipt.		Progressive Total of Column 3.	
1901.							
September ...	271	159	159	— 112	—112	2,250	2,362
October ...	253	159	159	— 94	— 94	2,156	2,268
November ...	557	159	159	— 398	—398	1,758	1,870
2nd December ...	...	...	...	...	...	1,663	1,775
31st December ...	4,416	159	159	—4,257	...	—2,499	...

Abstract of Period during which irrigation would be cut-off and pumping necessary.

Period of Irrigation cut-off.	With existing levels ...	25th August, 1900, to 6th October, 1900 ...	43 days.
	With F. T. L. and lowest level of irrigation raised 18 inches as proposed in this Report ...	8th September, 1900, to 6th October, 1900.	29 „
	With existing levels ...	1st March, 1901, to 2nd December, 1901.	277 „
	With F. T. L. and lowest level of irrigation raised 18 inches as proposed in this Report ...	„ „ „ ...	277 „

Note.—Loss by Evaporation and Percolation in Red Hills Tank has been taken at 105 million cubic feet per

When the water surface is below 37·69 M. S. L., the loss by evaporation and percolation has

No. 4—*contd.*

and lowest level of irrigation by 18 inches during the years 1899—1901 water-supyly ; (2) Periods of Cut-off of Irrigation Supply. Plate No. 10.)

5		6
Level in Red Hills Lake		Remarks.
With Existing Level.	If F. T. L. and lowest level of irrigation raised 18 inches.	
32·30	34·36	
33·30	35·10	31st October, lowest draw-off level (with 2 feet head) in new scheme with existing levels.
36·90	38·40	
37·69	39·19	2nd December, Irrigation starts with existing levels and proposed levels.
......	......	

with existing and proposed Levels during failing of Monsoon similar to that of 1900-1901.

Period during which water surface would be below lowest draw-off level, and therefore pumping necessary.	Existing Levels and proposed draw-off level in new scheme ...	30th June, 1901, to 31st October, 1901 ...	124 days.
	Proposed Levels and proposed draw-off level in new scheme		*Nil.*

month when the water surface is higher than 37·69 feet above Mean Sea Level.

been taken as 76 million cubic feet per month.

APPENDIX

Data and Figures to show effect of proposed raising of both F. T. L (when the Monsoon failed) on (1) Periods of Pumping for Madras City

(These Figures have been plotted graphically on

YEAR AND MONTH.	1 Receipts.	2 Issues including Evaporation and Percolation.		3 Excess of issues over receipts.		4 Progressive Total of Column 3.	
1904.							
February ...	401	438		37		37	
March ...	374	324		— 50		— 13	
April ...	249	324		75		62	
May ...	219	324		105		167	
June ...	230	324		94		261	
July ...	219	188		— 31		230	
August ...	203	188		— 15		215	
September ...	179	438		259		474	
October ...	361	438		74		548	
November ...	202	438		236		784	
December ...	60	438		378		1,162	
1905.							
January ...	77	438		361		1,523	
		Existing conditions.	With levels raised as proposed.	Existing conditions.	With levels raised as proposed.	Existing conditions.	With levels raised as proposed.
10th February ...	...	140	...	140	...	1,663	...
18th February ...	...	...	252	...	252	...	1,775
31st February ...	...	106	69	106	69	1,769	1,844
March ...	...	...	159	...	159	1,928	2,003
April ...	23	...	159	...	136	2,064	2,139
21st May ...	...	...	...	...	...	2,175	...
31st May ...	...	...	159	...	159	2,223	2,298
June ...	...	...	159	...	159	2,382	2,457
3rd July ...	...	...	...	...	...	...	2,474
31st July ...	...	...	159	...	159	2,541	2,616
August ...	197	...	159	...	—38	2,503	2,578
September ...	135	...	159	...	24	2,527	2,602

No. 4.

and lowest level of irrigation by 18 inches during the years 1904—1906
Water-supply ; (2) Periods of Cut-off of Irrigation Supply.
Plate No. 10).

5		6
Level in Red Hills Lake.		Remarks.
With Existing Levels.	If F. T. L. and lowest level of irrigation raised 18 inches.	
45·00	47·36	F. T. L. and Bund 18 inches high.
„	„	
44·90	„	
44·70	„	
44·36	„	
44·40	„	350 million cubic feet supplied from Cholavaram Tank.
44·50	„	
43·80	46·80	
43·60	46·40	
42·50	45·30	
41·20	43·00	
38·80	40·80	
37·69	...	10th February, 1905. Irrigation stopped (existing levels).
...	39·19	18th February, 1905. Irrigation stopped (proposed levels).
36·86	38·70	
35·50	37·40	
34·30	36·36	
33·13	...	21st May. Lowest draw-off level (with 2 feet head) in new scheme with existing levels.
32·40	34·86	
30·80	33·36	
...	33·13	3rd July. Lowest draw-off level (with 2 feet head) in new scheme.
28·30	31·40	
28·86	31·90	
28·40	31·85	

APPENDIX

Data and Figures to show effect of proposed raising of both F. T. L. (when the Monsoon failed) on (1) Periods of Pumping for Madras City (These Figures have been plotted graphically on

YEAR AND MONTH.	1		2		3		4	
	Receipts.		Issues including Evaporation and Percolation.		Excess of issues over receipts.		Progressive Total of Column 3.	
3rd October ...	...	...	...	...	...	...	...	2,474
13th October ...	...	...	...	...	...	...	2,175	...
21st October	...	935	...	111	...	...	...	1,775
22nd October	980	.	116	...	— 864	...	1,663	...
31st October	411	446	136	140	— 275	— 306	1,388	1,469
November ...	514		438		— 76		1,312	1,393
December ...	294		438		144		1,456	1,537
1906.								
January ...	1,944		438		— 1,506		— 50	31
February ...	348		438		90		40	121
March ...	227		324		97		137	218
April	...		324		324		461	542
May	...		324		324		785	866
June ...	...		324		324		1,109	1,190
July ...	10		188		178		1,287	1,368
August ...	1,137		188		— 949		338	419
September ...	527		438		— 89		249	330
October ...	390		438		48		297	378
November ...	566		438		128		425	506
December ...	969		438		— 531		— 106	— 25

Abstract of Period during which irrigation would be cut off and pumping necessary

Period of irrigation cut-off.	With existing levels 10th February, 1905, to 22nd October, 1905 ...		255 days.
	With F. T. L. and lowest level of irrigation raised 18 inches; as proposed in this Report.	18th February, 1905, to 21st October, 1905...	246 "

Note.—Loss by Evaporation and Percolation in Red Hills Tank has been taken at 105 When the water surface is below 37·69 M. S. L., the loss by evaporation and

No. 4—*contd.*

and lowest level of irrigation by 18 inches during the years 1904—1906

Water-supply ; (2) Periods of Cut-off of Irrigation Supply.

Plate No. 10.)

5		6
LEVEL IN RED HILLS LAKE.		
With Existing Levels.	If F. T. L. and lowest level of irrigation raised 18 inches.	REMARKS.
...	33·13	3rd October. Lowest draw-off level (with 2 feet head) in new scheme.
33·13	...	13th October. Lowest draw-off level (with 2 feet head) in new scheme with existing levels.
...	39·19	21st October, 1905. Irrigation starts with proposed levels.
37·69	...	22nd October, 1905. Irrigation starts with existing levels.
39·80	41·30	
40·10	41·60	
39·20	40·60	
45·00	47·36	F. T. L. + Bund 18 inches high. It is assumed that the first 350 million cubic feet are supplied from Cholavaram Tank.
44·90	...	
44·80	...	
43·80	46·40	
42·90	44·80	
41·50	42·86	
40·36	41·80	
44·30	47·10	
44·40	47·36	F. T. L. + Bund 18 inches high. It is assumed that the first 350 million cubic feet are supplied from Cholavaram Tank (with existing levels).
44·30	47·20	
43·40	46·50	
...	47·36	

with existing and proposed Levels with a failing Monsoon similar to that of 1905.

Period during which water surface would be below draw-off level.	With existing levels and proposed draw-off level in new scheme.	21st May, 1905, to 13th October, 1905 ...	146 days.
	With proposed levels and proposed draw-off level in new scheme.	3rd July, 1905, to 3rd October, 1905 ...	93 „

million cubic feet per month when the water surface is 9 feet above Mean Sea Level.

percolation has been taken as 76 millions cubic feet per month.

ESTIMATES.

A.

DETAILS, WEIGHTS, DIMENSIONS AND UNIT COSTS OF CAST-IRON PIPES AND SPECIALS, Etc., ADOPTED IN ESTIMATES.

PAGES

Dimensions of Cast-iron Pipe Flanges 190

Weights and Dimensions of—

Socket and Spigot Cast-iron Pipes 191

Do. do. quarter Bends 192

Do. do. one-eighth Bends 193

Do. do. one-sixteenth Bends 194

Do. do. Tee Branches ... ... 195 to 200

Do. do. reducing special Tee Branches 201

Do. do. Taper Pipes ... ... 202 to 205

Flanged Cast-iron Taper Pipes for connecting Sluice Valves with Mains ... 206

Cast-iron Collars 207

Particulars and Unit Cost of—

Cast-iron Saddles ... ... 208 and 209

Sluice Valves 210

Cost per Foot run—

Excavation for Pipe-laying 211

Laying and jointing Cast-iron Pipes 212

Summary for Pipes and Pipe-laying 213

Cutting Mains and fixing Saddles 214

DIMENSIONS OF BRITISH STANDARD PIPE FLANGES TO BE ADOPTED FOR ALL PIPE FLANGES.

Internal Diameter of Pipe.	Diameter of Flange.	Thickness of Flange.	Number of Bolts.	Size of Bolts.	Bolts Pitch Circle Diameter.
inches.	inches.	inches.		inches.	inches.
2½	6	¾	4	⅝	5
3	7¼	¾	4	⅝	5¾
4	8½	⅞	4	⅝	7
5	10	⅞	8	⅝	8¼
6	11	⅞	8	⅝	9¼
7	12	1	8	⅝	10¼
8	13¼	1	8	⅝	11½
9	14½	1	8	⅝	12¾
10	16	1	8	¾	14
12	18	1⅛	12	¾	16
14	20¾	1¼	12	⅞	18½
16	22¾	1¼	12	⅞	20½
18	25¼	1⅜	12	⅞	23
20	27¾	1½	16	⅞	25¼
21	29	1½	16	⅞	26½
22	30	1½	16	1	27½
24	32½	1⅝	16	1	29¾
27	36	1¾	20	1	33¼
30	39¾	1¾	20	1⅛	36¾
33	43¼	1⅞	20	1¼	40
36	46¼	1⅞	24	1¼	43
42	52½	2	28	1¼	49¼
48	58½	2¼	28	1¼	55¼

Note.—Bolt-holes for ½″ and ⅝″ bolts, the diameter of the holes to be $\frac{1}{16}$″ larger than the diameter of the bolts, and for larger sizes of bolts, ⅛″ larger than the diameter of the bolts. Bolt-holes to be drilled off centre lines.

SOCKET AND SPIGOT CAST-IRON PIPES.

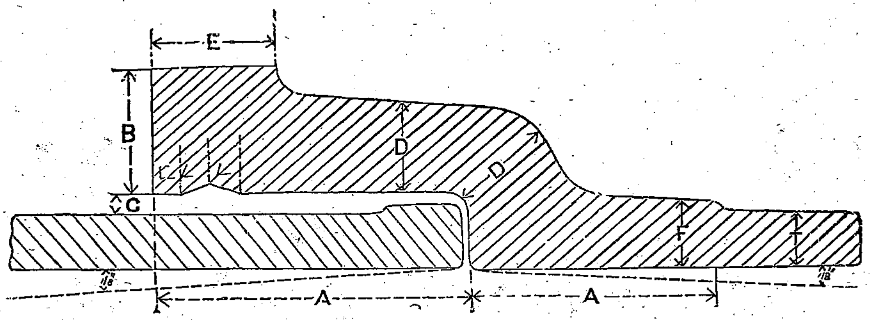

Diameter of Pipe.	A.	B.	C.	D.	E.	F.	L.	T.	Average Weight per foot.	Weight of each Pipe.			Length of each Pipe exclusive of Socket.	Diameter of Pipe.
Dimensions in inches.									lbs.	cwts.	qrs.	lbs.	feet.	inches.
2	3	1	$\frac{1}{4}$	$\frac{5}{8}$	$\frac{7}{8}$	$\frac{1}{2}$	$\frac{3}{8}$	$\frac{3}{8}$	10·2	0	2	5	6	2
$2\frac{1}{2}$	3	1	$\frac{1}{4}$	$\frac{5}{8}$	1	$\frac{1}{2}$	$\frac{3}{8}$	$\frac{3}{8}$	11·9	0	3	23	9	$2\frac{1}{2}$
3	3	1	$\frac{1}{4}$	$\frac{5}{8}$	1	$\frac{1}{2}$	$\frac{3}{8}$	$\frac{3}{8}$	14·00	1	0	14	9	3
4	3	1	$\frac{1}{4}$	$\frac{5}{8}$	1	$\frac{1}{2}$	$\frac{3}{8}$	$\frac{3}{8}$	18·7	1	2	0	9	4
5	$3\frac{1}{2}$	$1\frac{1}{8}$	$\frac{3}{8}$	$\frac{11}{16}$	$1\frac{1}{8}$	$\frac{5}{8}$	$\frac{3}{8}$	$\frac{7}{16}$	24·9	2	0	0	9	5
5	$3\frac{1}{2}$	$1\frac{1}{8}$	$\frac{3}{8}$	$\frac{11}{16}$	$1\frac{1}{8}$	$\frac{5}{8}$	$\frac{3}{8}$	$\frac{1}{2}$	34·8	2	3	5	9	6
7	$3\frac{1}{2}$	$1\frac{1}{8}$	$\frac{3}{8}$	$\frac{11}{16}$	$1\frac{1}{8}$	$\frac{5}{8}$	$\frac{3}{8}$	$\frac{1}{2}$	41·3	3	1	8	9	7
8	4	$1\frac{1}{4}$	$\frac{3}{8}$	$\frac{3}{4}$	$1\frac{1}{4}$	$\frac{5}{8}$	$\frac{7}{16}$	$\frac{1}{2}$	46·9	3	3	2	9	8
9	4	$1\frac{1}{4}$	$\frac{3}{8}$	$\frac{3}{4}$	$1\frac{1}{4}$	$\frac{5}{8}$	$\frac{7}{16}$	$\frac{9}{16}$	59·3	4	3	2	9	9
10	4	$1\frac{1}{4}$	$\frac{3}{8}$	$\frac{7}{8}$	$1\frac{3}{8}$	$\frac{3}{4}$	$\frac{7}{16}$	$\frac{9}{16}$	63·5	6	3	6	12	10
12	4	$1\frac{3}{8}$	$\frac{3}{8}$	$\frac{7}{8}$	$1\frac{3}{8}$	$\frac{3}{4}$	$\frac{7}{16}$	$\frac{5}{8}$	86·7	9	1	4	12	12
14	$4\frac{1}{2}$	$1\frac{1}{2}$	$\frac{3}{8}$	1	$1\frac{1}{2}$	$\frac{7}{8}$	$\frac{7}{16}$	$\frac{11}{16}$	110·4	11	3	9	12	14
16	$4\frac{1}{2}$	$1\frac{1}{2}$	$\frac{3}{8}$	1	$1\frac{1}{2}$	$\frac{7}{8}$	$\frac{7}{16}$	$\frac{11}{16}$	123·5	13	0	26	12	16
18	$4\frac{1}{2}$	$1\frac{5}{8}$	$\frac{3}{8}$	$1\frac{1}{8}$	$1\frac{5}{8}$	1	$\frac{7}{16}$	$\frac{3}{4}$	151·1	16	0	22	12	18
20	$4\frac{1}{2}$	$1\frac{3}{4}$	$\frac{3}{8}$	$1\frac{3}{16}$	$1\frac{3}{4}$	1	$\frac{7}{16}$	$\frac{13}{16}$	182·0	19	2	0	12	20
24	5	$1\frac{3}{4}$	$\frac{3}{8}$	$1\frac{1}{4}$	$1\frac{3}{4}$	$1\frac{1}{8}$	$\frac{1}{2}$	$\frac{7}{8}$	233·3	25	0	0	12	24
27	5	2	$\frac{3}{8}$	$1\frac{5}{16}$	2	$1\frac{3}{16}$	$\frac{1}{2}$	$\frac{15}{16}$	280·0	30	0	0	12	27
30	5	$2\frac{1}{4}$	$\frac{3}{8}$	$1\frac{3}{8}$	$2\frac{1}{4}$	$1\frac{1}{4}$	$\frac{1}{2}$	1	332·7	35	2	16	12	30
33	5	$2\frac{1}{4}$	$\frac{3}{8}$	$1\frac{1}{2}$	$2\frac{1}{4}$	$1\frac{1}{4}$	$\frac{1}{2}$	$1\frac{1}{8}$	411·3	44	0	8	12	33
36	5	$2\frac{1}{4}$	$\frac{3}{8}$	$1\frac{1}{2}$	$2\frac{1}{4}$	$1\frac{6}{16}$	$\frac{1}{2}$	$1\frac{1}{8}$	450·0	48	0	25	12	36
42	5	$2\frac{1}{4}$	$\frac{3}{8}$	$1\frac{1}{2}$	$2\frac{1}{4}$	$1\frac{3}{8}$	$\frac{1}{2}$	$1\frac{1}{4}$	583·0	62	1	22	12	42
48	$5\frac{1}{2}$	$2\frac{1}{2}$	$\frac{3}{8}$	$1\frac{5}{8}$	$2\frac{1}{2}$	$1\frac{1}{2}$	$\frac{1}{2}$	$1\frac{7}{16}$	763·3	81	3	3	12	48

Note.—Thickness of bends and other Special Pipes to be made $\frac{1}{8}''$ thick extra internally as shown by dotted lines.

SOCKET AND SPIGOT CAST-IRON QUARTER BENDS.

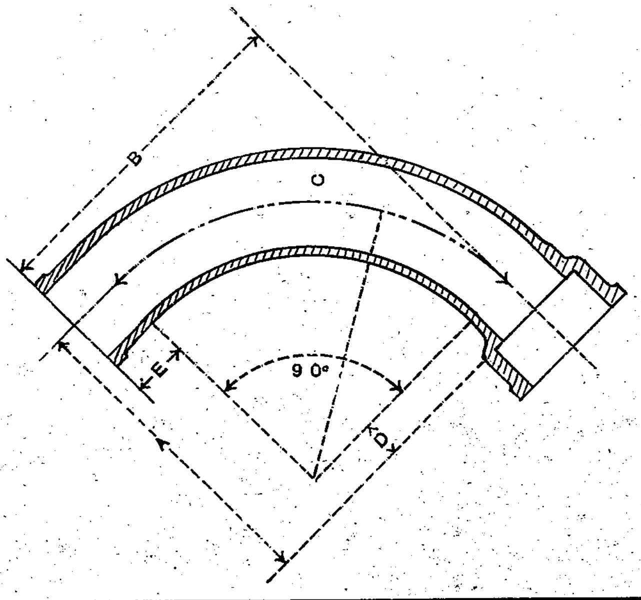

Internal Diameter.	Radius.		A.		B.		C.	D.	E. Straight piece.	Thickness.	Weights.		
inches.	ft.	ins.	ft.	ins.	ft.	ins.	feet.	inches.	inches.	inches.	cwts.	qrs.	lbs.
2	1	3	1	6	1	6½	1·96	3	3½	½	0	1	17
2½	1	3	1	6	1	6½	1·96	3	3½	½	0	2	0
3	1	6	1	9½	1	10	2·35	3½	4	½	0	2	19
4	1	6	1	9½	1	10	2·35	3½	4	½	0	3	11
5	1	6	1	10	1	10½	2·35	4	4½	9/16	1	0	24
6	1	9	2	1	2	1½	2·74	4	4½	⅝	1	3	1
7	1	9	2	1¼	2	1¾	2·74	4¼	4¾	⅝	2	0	16
8	1	9	2	1¼	2	1¾	2·74	4¼	4¾	⅝	2	1	3
9	2	0	2	4¼	2	4¾	3·14	4¼	4¾	11/16	3	0	14
10	2	0	2	4¼	2	4¾	3·14	4¼	4¾	11/16	3	1	25
12	2	3	2	7½	2	8	3·53	4½	5	¾	4	3	16
14	2	3	2	7½	2	8	3·53	4½	5	13/16	6	0	19
16	2	6	2	10½	2	11	3·92	4½	5	13/16	7	2	17
18	2	6	2	10½	2	11	3·92	4½	5	⅞	9	0	19
20	2	9	3	1½	3	2	4·32	4½	5	15/16	11	2	18
24	3	0	3	4½	3	5	4·71	4½	5	1	15	2	24
27	3	3	3	7½	3	8	5·10	4½	5	1 1/16	19	3	27
30	3	6	3	11	4	0	5·49	5	6	1⅛	25	0	14
33	3	6	3	11	4	0	5·49	5	6	1¼	30	2	4
36	4	0	4	5	4	6	6·28	5	6	1¼	36	3	21
42	4	9	5	2	5	3	7·46	5	6	1⅜	54	0	0
48	5	3	5	8	5	9	8·24	5	6	1 9/16	76	1	0

Note.—Sockets and Spigots are to be of standard dimensions given on page 191.

SOCKET AND SPIGOT CAST-IRON ONE-EIGHTH BENDS.

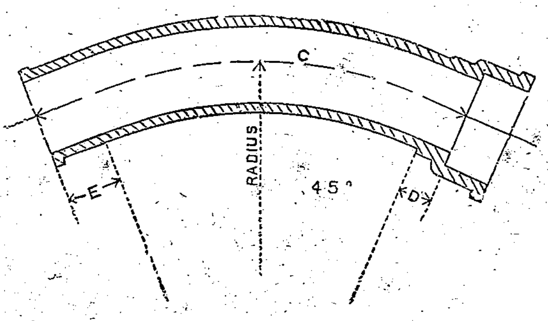

Internal diameter.	Radius.		C.		D.	E. Straight piece.	Thickness.	Weights.		
inches.	ft.	ins.	ft.	ins.	ins.	ins.	inches.	cwts.	qrs.	lbs.
2	2	6	2	6	3	3½	½	0	1	17
2½	2	6	2	6	3	3½	½	0	2	0
3	3	0	2	11½	3½	4	½	0	2	19
4	3	0	2	11½	3½	4	½	0	3	11
5	3	0	3	½	4	4½	9/16	1	0	24
6	3	6	3	5½	4	4½	5/8	1	3	1
7	3	6	3	6	4¼	4¾	5/8	2	0	16
8	3	6	3	6	4¼	4¾	5/8	2	1	3
9	4	0	3	10½	4¼	4¾	11/16	3	0	4
10	4	0	3	10½	4¼	4¾	11/16	3	1	25
12	4	6	4	4	4½	5	¾	4	3	16
14	4	6	4	4	4½	5	13/16	6	0	19
16	5	0	4	8½	4½	5	13/16	7	2	17
18	5	0	4	8½	4½	5	7/8	9	0	19
20	5	6	5	1½	4½	5	15/16	11	2	18
24	6	0	5	6	4½	5	1	15	2	24
27	6	6	5	11	4½	5	1 1/16	19	3	27
30	7	0	6	5	5	6	1⅛	25	0	14
33	7	0	6	5	5	6	1¼	30	2	4
36	8	0	7	2½	5	6	1¼	36	3	21
42	9	6	8	4½	5	6	1⅜	54	0	0
48	10	6	9	2	5	6	1 9/16	76	1	0

Note.—Sockets and Spigots are to be of standard dimensions given on page 191.

SOCKET AND SPIGOT CAST-IRON ONE-SIXTEENTH BENDS

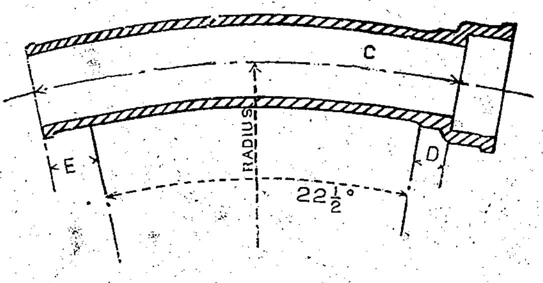

Internal Diameter.	Radius.		C.		D.	E. Straight piece.	Thickness.	Weight.		
inches.	ft.	ins.	ft.	ins.	inches.	inches.	inches.	cwts.	qrs.	lbs.
2	5	0	2	6	3	3½	½	0	1	17
2½	5	0	2	6	3	3½	½	0	2	0
3	6	0	2	11½	3½	4	½	0	2	19
4	6	0	2	11½	3½	4	½	0	3	11
5	6	0	3	0	4	4½	9/16	1	0	24
6	7	0	3	5½	4	4½	⅝	1	3	1
7	7	0	3	6	4¼	4¾	⅝	2	0	16
8	7	0	3	6	4¼	4¾	⅝	2	1	3
9	8	0	3	10½	4¼	4¾	11/16	3	0	4
10	8	0	3	10½	4¼	4¾	11/16	3	1	25
12	9	0	4	4	4½	5	¾	4	3	16
14	9	0	4	4	4½	5	13/16	6	0	19
16	10	0	4	8½	4½	5	13/16	7	2	17
18	10	0	4	8½	4½	5	⅞	9	0	19
	11	0	5	1½	4½	5	15/16	11	2	18
24	12	0	5	6	4½	5	1	15	2	24
27	13	0	5	11½	4½	5	1 1/16	19	3	27
30	14	0	6	5	5	6	1⅛	25	0	14
33	14	0	6	5	5	6	1¼	30	2	14
36	16	0	7	2½	5	6	1¼	36	3	21
42	19	0	8	4½	5	6	1⅜	54	0	0
48	21	0	9	2	5	6	1 9/16	76	1	0

Note—Sockets and Spigots are to be of standard dimensions given on page 191.

SOCKET AND SPIGOT CAST-IRON TEE BRANCHES.

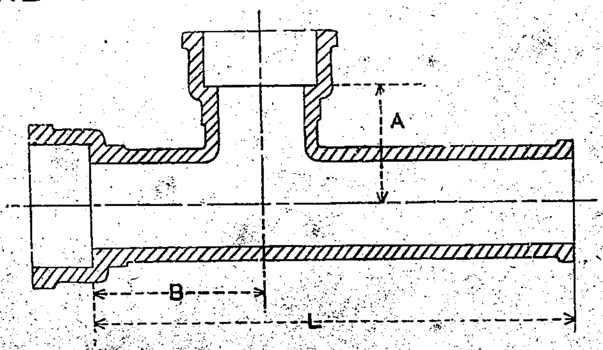

Internal Diameter of Pipes.	Diameter of Branch.	Thickness.	L.		A.		B.		Weights.		
inches.	inches.	inches.	ft.	ins.	ft.	ins.	ft.	ins.	cwts.	qrs.	lbs.
2½	2½	½	3	2	0	6½	0	11	0	3	4
3	2	½	3	2	0	8	0	11	0	3	8
3	2½	½	3	2	0	8	0	11	0	3	10
3	3	½	3	2	0	8	0	11	0	3	15
4	2	½	3	2	0	8½	0	11	1	0	1
4	2½	½	3	2	0	8½	0	11	1	0	8
4	3	½	3	2	0	8½	0	11	1	0	9
4	4	½	3	2	0	8½	1	0	1	0	20
5	2	9/16	3	2	0	9½	0	11	1	1	8
5	2½	9/16	3	2	0	9½	0	11	1	1	12
5	3	9/16	3	2	0	9½	0	11	1	1	15
5	4	9/16	3	2	0	9½	1	0	1	1	26
5	5	9/16	3	2	0	9½	1	0	1	2	11
6	2	⅝	3	2	0	10	0	11	1	3	3
6	2½	⅝	3	2	0	10	0	11	1	3	11
6	3	⅝	3	2	0	10	0	11	1	3	14
6	4	⅝	3	2	0	10	1	0	1	3	24
6	5	⅝	3	2	0	10	1	0	2	0	10
6	6	⅝	3	2	0	10	1	1	2	0	23
7	2	⅝	3	2	0	10½	0	11	2	0	1
7	2½	⅝	3	2	0	10½	0	11	2	0	7
7	3	⅝	3	2	0	10½	0	11	2	0	12
7	4	⅝	3	2	0	10½	1	0	2	0	24

Note.—Sockets and Spigots are to be of standard dimensions given on page 191.

Socket and Spigot Cast-iron Tee Branches—(*contd.*)

Internal Diameter of Pipe.	Diameter of Branch.	Thickness.	L.		A.		B.		Weights.		
inches.	inches.	inches.	ft.	ins.	ft.	ins.	ft.	ins.	cwts.	qrs.	lbs.
7	5	$\frac{5}{8}$	3	2	0	10½	1	0	2	1	9
7	6	$\frac{5}{8}$	3	2	0	10½	1	1	2	1	22
7	7	$\frac{5}{8}$	3	2	0	10½	1	1	2	2	9
8	2	$\frac{5}{8}$	3	2	0	11	0	11	2	0	17
8	2½	$\frac{5}{8}$	3	2	0	11	0	11	2	0	24
8	3	$\frac{5}{8}$	3	2	0	11	0	11	2	1	10
8	4	$\frac{5}{8}$	3	2	0	11	1	0	2	1	20
8	5	$\frac{5}{8}$	3	2	0	11	1	0	2	2	4
8	6	$\frac{5}{8}$	3	2	0	11	1	1	2	2	16
8	7	$\frac{5}{8}$	3	2	0	11	1	1	2	3	4
8	8	$\frac{5}{8}$	3	2	0	11	1	2	2	3	15
9	2	$\frac{11}{16}$	3	2	0	11½	0	11	2	2	26
9	2½	$\frac{11}{16}$	3	2	0	11½	0	11	2	3	4
9	3	$\frac{11}{16}$	3	2	0	11½	0	11	2	3	14
9	4	$\frac{11}{16}$	3	2	0	11½	1	0	3	0	0
9	5	$\frac{11}{16}$	3	2	0	11½	1	0	3	0	12
9	6	$\frac{11}{16}$	3	2	0	11½	1	1	3	0	24
9	7	$\frac{11}{16}$	3	2	0	11½	1	1	3	1	15
9	8	$\frac{11}{16}$	3	2	0	11½	1	2	3	1	27
9	9	$\frac{11}{16}$	3	2	0	11½	1	2	3	2	26
10	2	$\frac{11}{16}$	3	2	1	0	0	11	3	0	2
10	2½	$\frac{11}{16}$	3	2	1	0	0	11	3	0	6
10	3	$\frac{11}{16}$	3	2	1	0	0	11	3	0	20
10	4	$\frac{11}{16}$	3	2	1	0	1	0	3	1	2
10	5	$\frac{11}{16}$	3	2	1	0	1	0	3	1	15
10	6	$\frac{11}{16}$	3	2	1	0	1	1	3	1	27
10	7	$\frac{11}{16}$	3	2	1	0	1	1	3	2	14
10	8	$\frac{11}{16}$	3	2	1	0	1	2	3	2	27
10	9	$\frac{11}{16}$	3	2	1	0	1	2	3	3	18
10	10	$\frac{11}{16}$	3	2	1	0	1	3	4	0	6

Note.—Sockets and Spigots are to be of standard dimensions given on page 191.

Socket and Spigot Cast-iron Tee Branches—(*contd.*)

Internal Diameter of Pipe.	Diameter of Branch.	Thickness.	L.		A.		B.		Weights.		
inches.	inches.	inches.	ft.	ins.	ft.	ins.	ft.	ins.	cwts.	qrs.	lbs.
12	2	¾	3	2	1	1½	0	11	3	0	16
12	2½	¾	3	2	1	1½	0	11	3	1	23
12	3	¾	3	2	1	1½	0	11	3	2	24
12	4	¾	3	2	1	1½	1	0	4	0	16
12	5	¾	3	2	1	1½	1	0	4	1	0
12	6	¾	3	2	1	1½	1	1	4	1	12
12	7	¾	3	2	1	1½	1	1	4	1	27
12	8	¾	3	2	1	1½	1	2	4	2	13
12	9	¾	3	2	1	1½	1	2	4	3	1
12	10	¾	3	2	1	1½	1	3	4	3	16
12	12	¾	3	2	1	1½	1	4	5	0	26
14	2	$\frac{13}{16}$	3	2	1	2½	0	11	4	3	11
14	2½	$\frac{13}{16}$	3	2	1	2½	0	11	4	3	19
14	3	$\frac{13}{16}$	3	2	1	2½	0	11	5	0	5
14	4	$\frac{13}{16}$	3	2	1	2½	1	0	5	0	15
14	5	$\frac{13}{16}$	3	2	1	2½	1	0	5	1	0
14	6	$\frac{13}{16}$	3	2	1	2½	1	1	5	1	13
14	7	$\frac{13}{16}$	3	2	1	2½	1	1	5	1	27
14	8	$\frac{13}{16}$	3	2	1	2½	1	2	5	2	13
14	9	$\frac{13}{16}$	3	2	1	2½	1	2	5	3	2
14	10	$\frac{13}{16}$	3	2	1	2½	1	3	5	3	17
14	12	$\frac{13}{16}$	3	2	1	2½	1	4	6	0	25
16	2	$\frac{13}{16}$	3	8	1	4	0	11	6	0	15
16	2½	$\frac{13}{16}$	3	8	1	4	0	11	6	0	19
16	3	$\frac{13}{16}$	3	8	1	4	0	11	6	1	15
16	4	$\frac{13}{16}$	3	8	1	4	1	0	6	1	24
16	5	$\frac{13}{16}$	3	8	1	4	1	0	6	2	8
16	6	$\frac{13}{16}$	3	8	1	4	1	1	6	2	20
16	7	$\frac{13}{16}$	3	8	1	4	1	1	6	3	7
16	9	$\frac{13}{16}$	3	8	1	4	1	2	7	0	3

Note.—Sockets and Spigots are to be of standard dimensions given on page 191.

Socket and Spigot Cast-iron Tee Branches—(*contd.*)

Internal Diameter of Pipe.	Diameter of Branch.	Thickness.	L.		A.		B.		Weights.		
inches.	inches.	inches.	ft.	ins.	ft.	ins.	ft.	ins.	cwts.	qrs.	lbs.
16	10	$\frac{13}{16}$	3	8	1	4	1	3	7	0	19
16	12	$\frac{13}{16}$	3	8	1	4	1	4	7	1	26
16	14	$\frac{13}{16}$	3	8	1	4	1	5	7	3	9
18	2	$\frac{7}{8}$	3	8	1	6	0	11	7	1	22
18	2½	$\frac{7}{8}$	3	8	1	6	0	11	7	1	26
18	3	$\frac{7}{8}$	3	8	1	6	0	11	7	2	23
18	4	$\frac{7}{8}$	3	8	1	6	1	0	7	3	5
18	5	$\frac{7}{8}$	3	8	1	6	1	0	7	3	18
18	6	$\frac{7}{8}$	3	8	1	6	1	1	8	0	2
18	7	$\frac{7}{8}$	3	8	1	6	1	1	8	0	19
18	9	$\frac{7}{8}$	3	8	1	6	1	2	8	1	18
18	10	$\frac{7}{8}$	3	8	1	6	1	3	8	2	4
18	12	$\frac{7}{8}$	3	8	1	6	1	4	8	3	14
18	14	$\frac{7}{8}$	3	8	1	6	1	5	9	0	26
18	16	$\frac{7}{8}$	3	8	1	6	1	6	9	2	21
20	2½	$\frac{15}{16}$	4	8	1	7	1	11	10	0	3
20	3	$\frac{15}{16}$	4	8	1	7	1	11	10	0	5
20	4	$\frac{15}{16}$	4	8	1	7	1	11	10	2	13
20	5	$\frac{15}{16}$	4	8	1	7	1	11	10	3	11
20	6	$\frac{15}{16}$	4	8	1	7	1	11	11	1	8
20	7	$\frac{15}{16}$	4	8	1	7	1	1	11	1	24
20	9	$\frac{15}{16}$	4	8	1	7	1	2	11	2	24
20	10	$\frac{15}{16}$	4	8	1	7	1	3	11	3	11
20	12	$\frac{15}{16}$	4	8	1	7	1	4	12	0	21
20	14	$\frac{15}{16}$	4	8	1	7	1	5	12	1	22
20	16	$\frac{15}{16}$	4	8	1	7	1	6	12	3	24
20	18	$\frac{15}{16}$	4	8	1	7	1	7	13	1	21
24	2½	1	5	2	1	9½	1	1	14	3	26
24	3	1	5	2	1	9½	1	1	15	0	0
24	4	1	5	2	1	9½	1	1	15	0	5

Note.—Sockets and Spigots are to be of standard dimensions given on page 191.

Socket and Spigot Cast-iron Tee Branches—(*contd.*)

Internal Diameter of Pipe.	Diameter of Branch.	Thickness.	L.		A.		B.		Weights.		
inches.	inches.	inches.	ft.	ins.	ft.	ins.	ft.	ins.	cwts.	qrs.	lbs.
24	6	1	5	2	1	9½	1	1	15	1	20
24	7	1	5	2	1	9½	1	1	15	2	9
24	9	1	5	2	1	9½	1	2	15	3	9
24	10	1	5	2	1	9½	1	3	15	3	24
24	12	1	5	2	1	9½	1	4	16	1	6
24	16	1	5	2	1	9½	1	6	17	0	14
24	18	1	5	2	1	9½	1	7	18	0	9
27	2½	$1\frac{1}{16}$	5	2	1	11	1	2	17	2	1
27	3	$1\frac{1}{16}$	5	2	1	11	1	2	17	2	3
27	4	$1\frac{1}{16}$	5	2	1	11	1	2	17	2	6
27	6	$1\frac{1}{16}$	5	2	1	11	1	2	17	2	21
27	9	$1\frac{1}{16}$	5	2	1	11	1	2	18	2	22
27	10	$1\frac{1}{16}$	5	2	1	11	1	3	18	3	11
27	12	$1\frac{1}{16}$	5	2	1	11	1	4	19	0	20
27	14	$1\frac{1}{16}$	5	2	1	11	1	5	19	2	6
27	16	$1\frac{1}{16}$	5	2	1	11	1	6	19	3	24
27	18	$1\frac{1}{16}$	5	2	1	11	1	7	20	1	17
30	2½	1⅛	6	1	2	1	1	2	23	2	4
30	3	1⅛	6	1	2	1	1	2	23	2	8
30	4	1⅛	6	1	2	1	1	2	23	2	16
30	9	1⅛	6	1	2	1	1	2	25	0	2
30	10	1⅛	6	1	2	1	1	3	25	0	18
30	12	1⅛	6	1	2	1	1	4	25	2	2
30	14	1⅛	6	1	2	1	1	5	25	3	20
30	16	1⅛	6	1	2	1	1	6	26	1	17
30	18	1⅛	6	1	2	1	1	7	26	3	15
33	2½	1¼	6	1	2	2	1	2	28	3	24
33	3	1¼	6	1	2	2	1	2	29	0	0
33	4	1¼	6	1	2	2	1	2	29	0	13
33	9	1¼	6	1	2	2	1	2	30	0	27

Note.—Sockets and Spigots are to be of standard dimensions given on page 191.

Socket and Spigot Cast-iron Tee Branches—(*contd.*)

Internal Diameter of Pipe.	Diameter of Branch.	Thickness.	L.		A.		B.		Weights.		
inches.	inches.	inches.	ft.	ins.	ft.	ins.	ft.	ins.	cwts.	qrs.	lbs.
33	12	$1\frac{1}{4}$	6	1	2	2	1	4	30	3	3
33	14	$1\frac{1}{4}$	6	1	2	2	1	5	31	0	9
33	16	$1\frac{1}{4}$	6	1	2	2	1	6	31	2	21
33	18	$1\frac{1}{4}$	6	1	2	2	1	7	32	0	24
36	$2\frac{1}{2}$	$1\frac{1}{4}$	6	7	2	5	1	2	33	1	22
36	3	$1\frac{1}{4}$	6	7	2	5	1	2	33	1	24
36	4	$1\frac{1}{4}$	6	7	2	5	1	2	33	2	4
36	9	$1\frac{1}{4}$	6	7	2	5	1	2	35	0	27
36	12	$1\frac{1}{4}$	6	7	2	5	1	4	35	3	9
36	14	$1\frac{1}{4}$	6	7	2	5	1	5	36	1	3
42	9	$1\frac{3}{8}$	7	1	2	9	1	4	47	0	20
42	10	$1\frac{3}{8}$	7	1	2	9	1	4	47	1	16
42	12	$1\frac{3}{8}$	7	1	2	9	1	4	48	1	23
42	14	$1\frac{3}{8}$	7	1	2	9	1	5	48	3	17
42	16	$1\frac{3}{8}$	7	1	2	9	1	6	49	2	0
42	18	$1\frac{3}{8}$	7	1	2	9	1	7	50	0	9
42	24	$1\frac{3}{8}$	7	1	2	9	1	10	52	0	0
42	27	$1\frac{3}{8}$	7	1	2	9	2	0	53	0	9
42	36	$1\frac{3}{8}$	7	1	2	9	2	4	55	1	25
48	16	$1\frac{9}{16}$	7	1	3	1	1	6	63	2	25
48	18	$1\frac{9}{16}$	7	1	3	1	1	7	64	1	8
48	27	$1\frac{9}{16}$	7	1	3	1	2	0	67	1	26
48	30	$1\frac{9}{16}$	7	1	3	1	2	1	68	1	1
48	36	$1\frac{9}{16}$	7	1	3	1	2	4	70	0	5
48	42	$1\frac{9}{16}$	7	1	3	1	2	7	72	1	5

Note.—Sockets and Spigots are to be of standard of dimensions given on page 191.

ROUGHING FILTER AT RED HILLS

PLAN
SCALE 1 IN=40 FEET

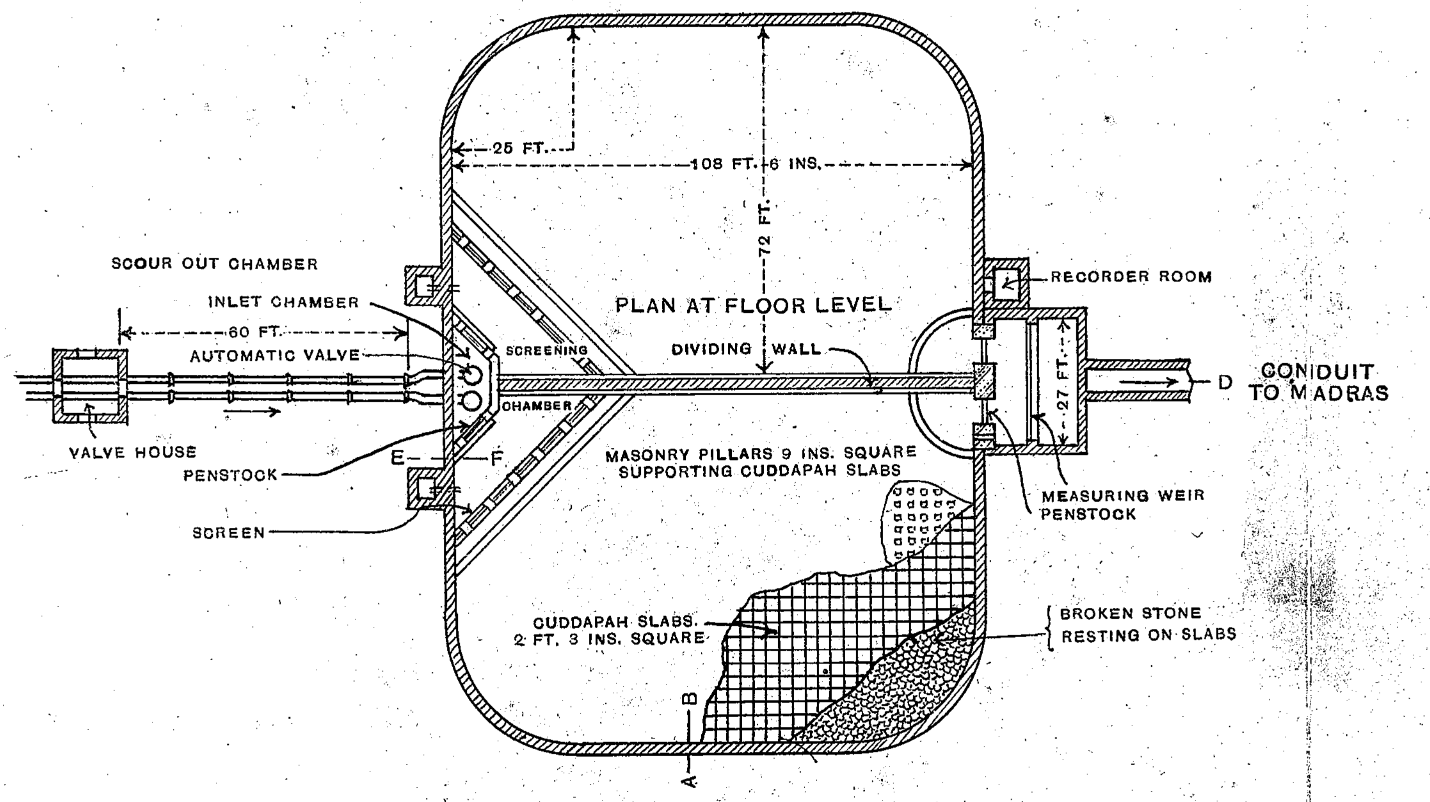

SECTION ON C. D.

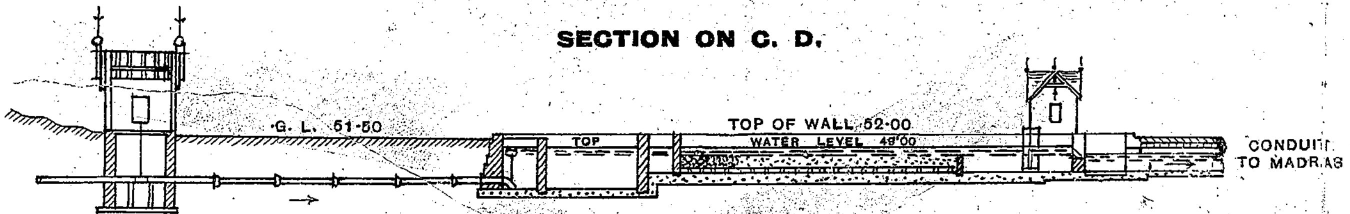

ENLARGED PLANS & SECTIONS
SCALE 1 IN=8 FEET

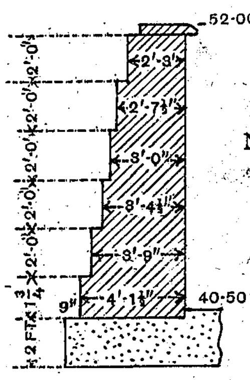

SECTION ON E. F.

NOTE.—Levels give heights in feet above a datum 20 ft. below Mean Sea Level.

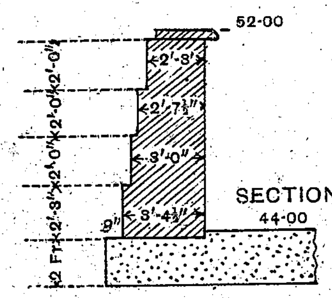

SECTION ON A. B.

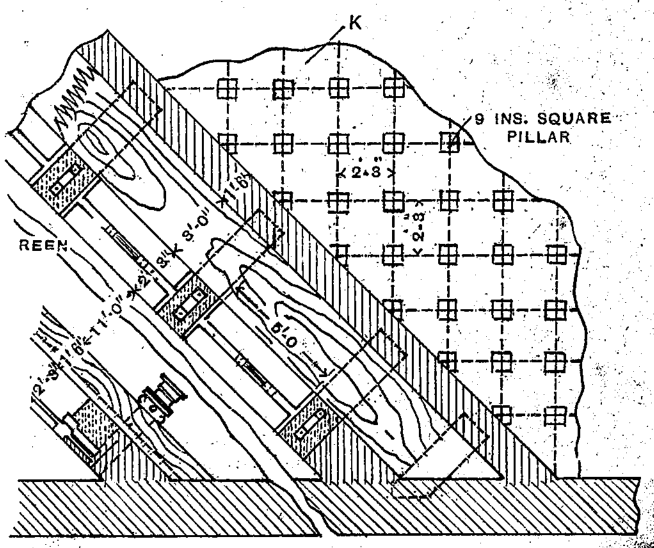

PLAN OF INLET AND SCREENING CHAMBERS

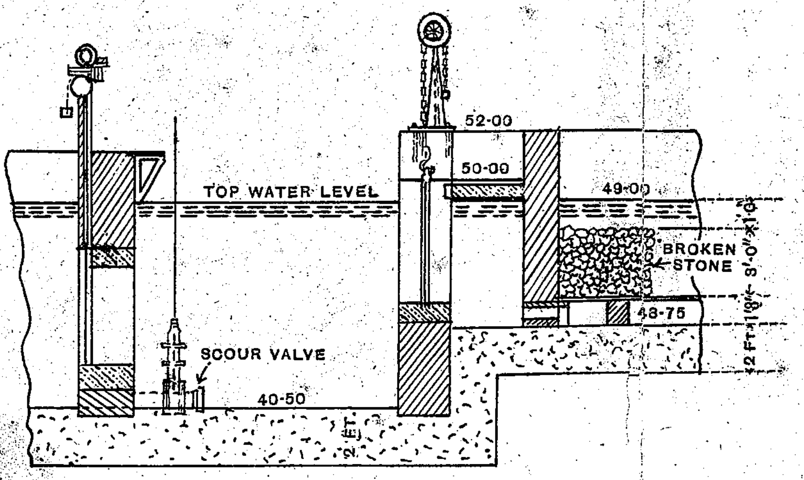

SECTION ON J. K.

[signature]

M.A., M. INST. C.E., M. AM. SOC., C.E., ETC.
SPECIAL ENGINEER,
CORPORATION OF MADRAS.
SEPTEMBER, 1911.

PLATE No. 6.

FILTER BEDS

FIG. 1. GENERAL ARRANGEMENT PLAN

SCALE 1 IN. = 200 FT.

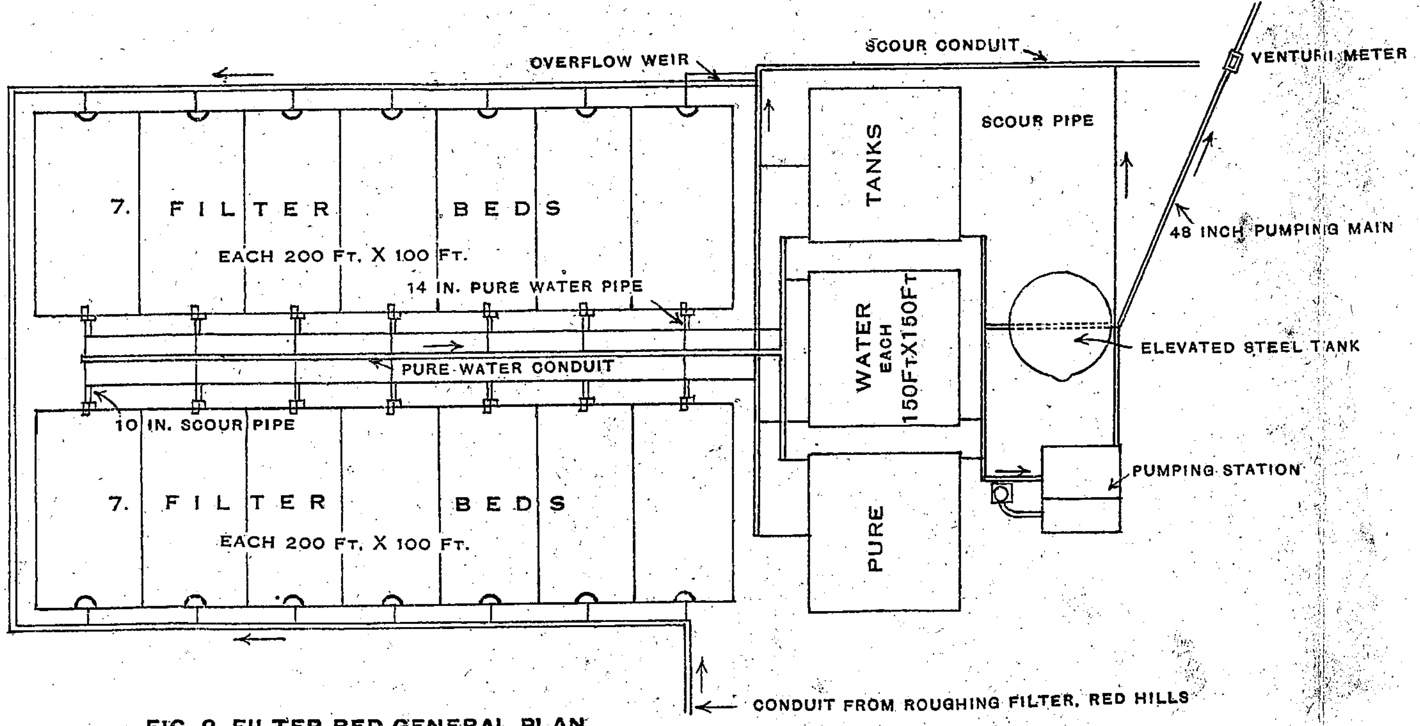

FIG. 2. FILTER BED GENERAL PLAN

SCALE 1 IN. = 80 FT.

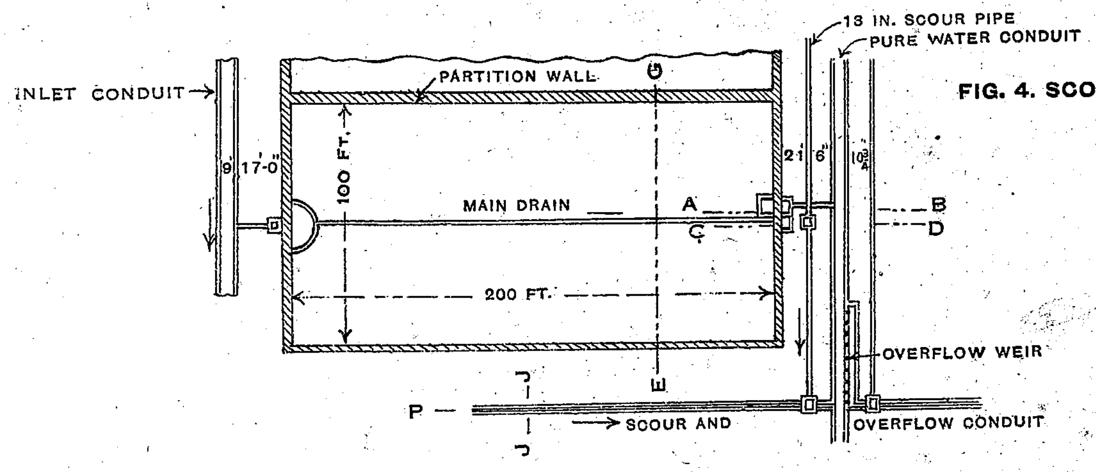

FIG. 4. SCOUR AND OVERFLOW CONDUIT

SECTION ON J. J.

SCALE 1 INCH = 8 FT.

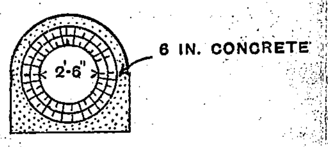

FIG. 3. SECTION E. G.

SCALE 1 IN. = 8 FT.

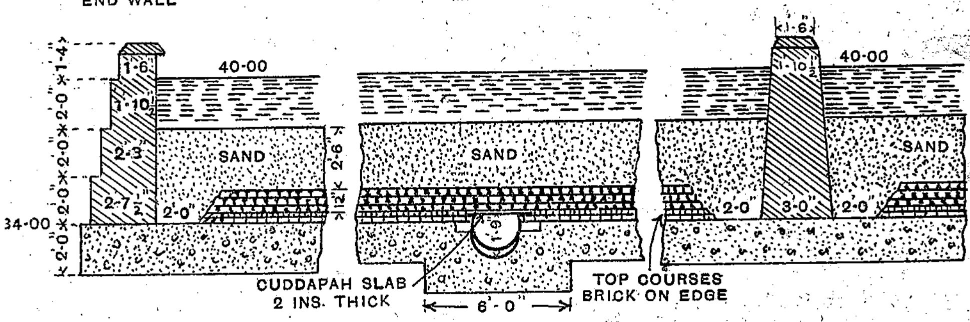

FIG. 5. SCOUR AND OVERFLOW CONNECTION

SECTION ON P. P.

SCALE 1 IN. = 16 FT.

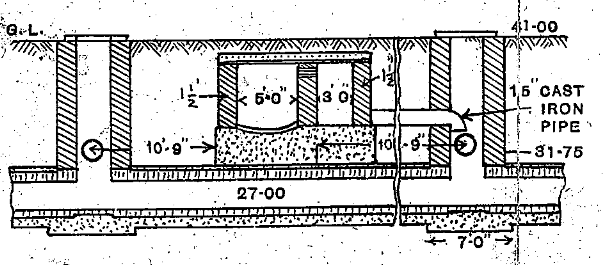

FIG. 6. OUTLET CHAMBER

SECTION ON A. B.

FIG. 7. SCOUR VALVE CHAMBER

SECTION ON C. D.

SCALE 1 INCH = 8 FT.

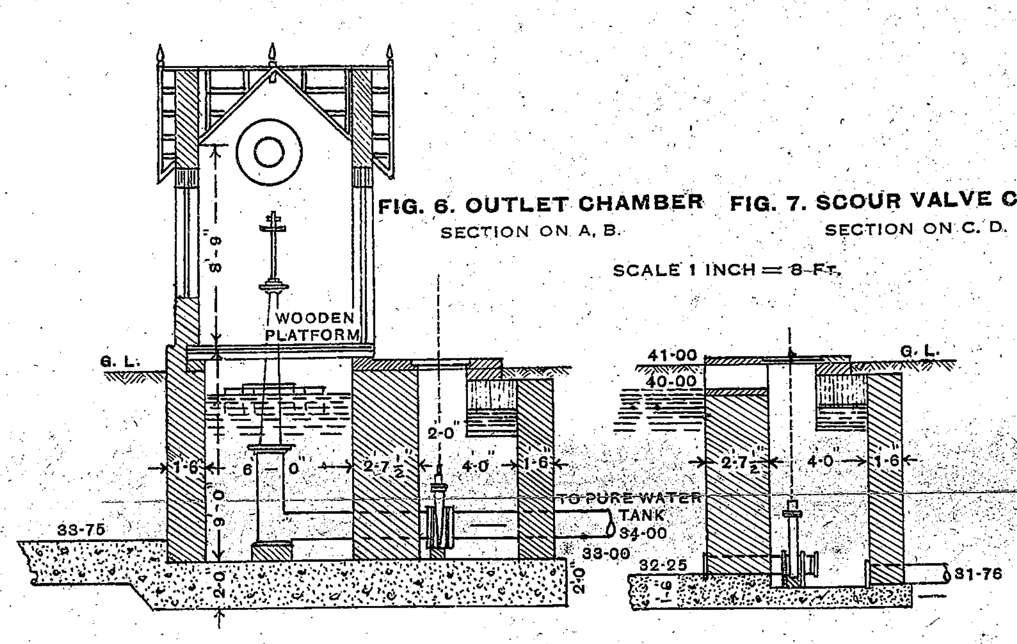

J. W. Madeley
M.A., M. INST. C.E., M AM. SOC. C.E., ETC.,
SPECIAL ENGINEER,
CORPORATION OF MADRAS.

SEPTEMBER, 1911.

SOCKET AND SPIGOT CAST-IRON REDUCING SPECIAL TEE BRANCHES.

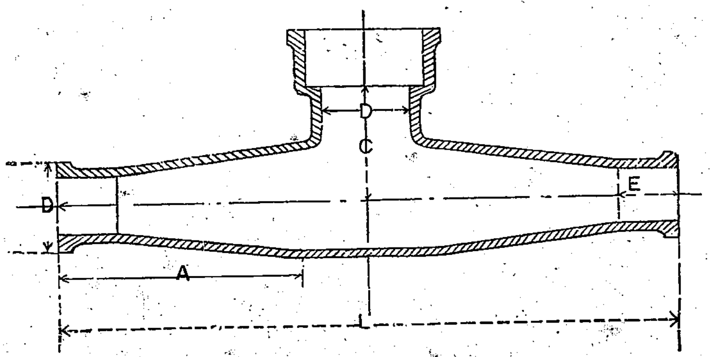

Diameter of Pipe D.	Diameter of Branch D.	L		A		C		E	Thickness.	Weights.		
inches.	inches.	ft.	ins.	ft.	ins.	ft.	ins.	ins.	inches.	cwts.	qrs.	lbs.
3	4	6	8	3	2	0	8½	3½	½	1	2	8
3	5	6	9	3	2	0	9½	3½	9/16	2	0	7
3	6	6	10	3	2	0	10	3½	5/8	2	2	3
3	7	6	11	3	2	0	10½	3½	5/8	2	1	17
4	5	6	9	3	2	0	9½	3½	9/16	2	1	21
4	6	6	10	3	2	0	10	3½	5/8	2	3	1
4	7	6	11	3	2	0	10½	3½	5/8	3	1	5
4	8	7	0	3	2	0	11	3½	5/8	3	1	1
5	6	5	10	3	2	0	10	4	5/8	2	3	4
5	7	6	11	3	2	0	10½	4	5/8	3	1	9
5	8	7	0	3	2	0	11	4	5/8	3	2	24
5	9	7	1	3	2	0	11½	4	11/16	4	2	14
6	7	6	11	3	2	0	10½	4	5/8	3	2	13
6	8	7	0	3	2	0	11	4	5/8	3	3	9
6	9	7	1	3	2	0	11½	4	11/16	4	3	19

Note.—Socket and Spigots are to be of standard dimensions given on page 191.

SOCKET AND SPIGOT CAST-IRON TAPER PIPES.

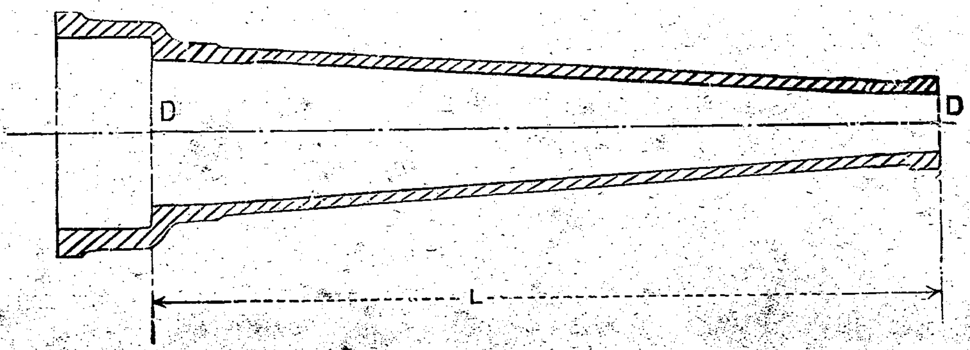

Diameter of Taper Pipes.		Length exclusive of Socket L.		Thickness.		Weight.		
D Socket end.	D_1 Spigot end.			From	To			
inches.	inches.	ft.	ins.	inches.	inches.	cwts.	qrs.	lbs.
4	3	3	2	$\frac{1}{2}$	$\frac{1}{2}$	0	2	8
5	3	3	2	$\frac{9}{16}$	$\frac{1}{2}$	1	0	4
5	4	3	2	$\frac{9}{16}$	$\frac{1}{2}$	1	0	12
6	3	3	2	$\frac{5}{8}$	$\frac{1}{2}$	1	1	3
6	4	3	2	$\frac{5}{8}$	$\frac{1}{2}$	1	1	10
6	5	3	2	$\frac{5}{8}$	$\frac{9}{16}$	1	1	24
7	3	3	2	$\frac{5}{8}$	$\frac{1}{2}$	1	1	11
7	4	3	2	$\frac{5}{8}$	$\frac{1}{2}$	1	2	1
7	5	3	2	$\frac{5}{8}$	$\frac{9}{16}$	1	2	19
7	6	3	2	$\frac{5}{8}$	$\frac{5}{8}$	1	3	10
8	3	8	2	$\frac{5}{8}$	$\frac{1}{2}$	1	2	15
8	4	3	2	$\frac{5}{8}$	$\frac{1}{2}$	1	2	20
8	5	3	2	$\frac{5}{8}$	$\frac{9}{16}$	1	3	8
8	6	3	2	$\frac{5}{8}$	$\frac{5}{8}$	1	3	25
8	7	3	2	$\frac{5}{8}$	$\frac{5}{8}$	2	0	5
9	3	3	2	$\frac{11}{16}$	$\frac{1}{2}$	1	3	24
9	4	3	2	$\frac{11}{16}$	$\frac{1}{2}$	2	0	0
9	5	3	2	$\frac{11}{16}$	$\frac{9}{16}$	2	0	16
9	6	3	2	$\frac{11}{16}$	$\frac{5}{8}$	2	1	7
9	7	3	2	$\frac{11}{16}$	$\frac{5}{8}$	2	1	13
9	8	3	2	$\frac{11}{16}$	$\frac{5}{8}$	2	1	19

Note.—Sockets and Spigots are to be of standard dimensions given on page 191.

Socket and Spigot Cast-iron Taper Pipes—(*contd.*)

Diameter of Taper Pipes.		Length exclusive of Socket L.		Thickness.		Weight.		
D Socket end.	D_1 Spigot end.			From	To			
inches.	inches.	ft.	ins.	inches.	inches.	cwts.	qrs.	lbs.
10	5	3	2	$\frac{11}{16}$	$\frac{9}{16}$	2	1	12
10	6	3	2	$\frac{11}{16}$	$\frac{5}{8}$	2	2	0
10	7	3	2	$\frac{11}{16}$	$\frac{5}{8}$	2	2	7
10	8	3	2	$\frac{11}{16}$	$\frac{5}{8}$	2	2	14
10	9	3	2	$\frac{11}{16}$	$\frac{11}{16}$	2	3	2
12	6	3	2	$\frac{3}{4}$	$\frac{5}{8}$	3	0	8
12	7	3	2	$\frac{3}{4}$	$\frac{5}{8}$	3	0	10
12	8	3	2	$\frac{3}{4}$	$\frac{5}{8}$	3	0	18
12	9	3	2	$\frac{3}{4}$	$\frac{11}{16}$	3	1	18
12	10	3	2	$\frac{3}{4}$	$\frac{11}{16}$	3	1	27
14	7	3	2	$\frac{13}{16}$	$\frac{5}{8}$	3	2	25
14	8	3	2	$\frac{13}{16}$	$\frac{5}{8}$	3	3	3
14	9	3	2	$\frac{13}{16}$	$\frac{11}{16}$	4	0	6
14	10	3	2	$\frac{13}{16}$	$\frac{11}{16}$	4	0	13
14	12	3	2	$\frac{13}{16}$	$\frac{3}{4}$	4	1	20
16	8	3	2	$\frac{13}{16}$	$\frac{5}{8}$	4	1	4
16	9	3	2	$\frac{13}{16}$	$\frac{11}{16}$	4	2	7
16	10	3	2	$\frac{13}{16}$	$\frac{11}{16}$	4	2	16
16	12	3	2	$\frac{13}{16}$	$\frac{3}{4}$	4	3	27
16	14	3	2	$\frac{13}{16}$	$\frac{13}{16}$	5	1	0
18	9	3	8	$\frac{7}{8}$	$\frac{11}{16}$	5	3	16
18	10	3	8	$\frac{7}{8}$	$\frac{11}{16}$	5	3	24
18	12	3	8	$\frac{7}{8}$	$\frac{3}{4}$	6	1	8
18	14	3	8	$\frac{7}{8}$	$\frac{13}{16}$	6	2	18
18	16	3	8	$\frac{7}{8}$	$\frac{13}{16}$	6	3	24
20	10	3	8	$\frac{15}{16}$	$\frac{11}{16}$	6	3	14
20	12	3	8	$\frac{15}{16}$	$\frac{3}{4}$	7	0	22
20	14	3	8	$\frac{15}{16}$	$\frac{13}{16}$	7	2	12

Note.—Sockets and Spigots are to be of standard dimensions given on page 191.

Socket and Spigot Cast-iron Taper Pipes—(*contd.*)

Diameter of Taper Pipes.		Length exclusive of Socket L.		Thickness.		Weight		
D Socket end.	D_1 Spigot end.			From	To			
inches.	inches.	ft.	ins.	inches.	inches.	cwts.	qrs.	lbs.
20	16	3	8	$\frac{15}{16}$	$\frac{13}{16}$	7	3	8
20	18	3	8	$\frac{15}{16}$	$\frac{7}{8}$	8	1	5
24	12	4	2	1	$\frac{3}{4}$	9	2	8
24	14	4	2	1	$\frac{13}{16}$	9	2	16
24	16	4	2	1	$\frac{13}{16}$	10	0	15
24	18	4	2	1	$\frac{7}{8}$	10	3	6
24	20	4	2	1	$\frac{15}{16}$	11	1	0
27	14	4	2	$1\frac{1}{16}$	$\frac{13}{16}$	11	2	12
27	16	4	2	$1\frac{1}{16}$	$\frac{13}{16}$	11	2	22
27	18	4	2	$1\frac{1}{16}$	$\frac{7}{8}$	12	1	6
27	24	4	2	$1\frac{1}{16}$	1	13	3	4
30	16	4	7	$1\frac{1}{8}$	$\frac{13}{16}$	14	0	7
30	18	4	7	$1\frac{1}{8}$	$\frac{7}{8}$	14	3	0
30	20	4	7	$1\frac{1}{8}$	$\frac{15}{16}$	15	2	19
30	24	4	7	$1\frac{1}{8}$	1	16	2	7
30	27	4	7	$1\frac{1}{8}$	$1\frac{1}{16}$	17	2	18
33	18	4	7	$1\frac{1}{4}$	$\frac{7}{8}$	16	3	1
33	24	4	7	$1\frac{1}{4}$	1	18	2	14
33	27	4	7	$1\frac{1}{4}$	$1\frac{1}{16}$	19	2	26
33	30	4	7	$1\frac{1}{4}$	$1\frac{1}{8}$	21	0	7
36	18	5	1	$1\frac{1}{4}$	$\frac{7}{8}$	19	2	9
36	24	5	1	$1\frac{1}{4}$	1	21	2	14
36	27	5	1	$1\frac{1}{4}$	$1\frac{1}{16}$	22	3	6
36	30	5	1	$1\frac{1}{4}$	$1\frac{1}{8}$	24	1	8
36	33	5	1	$1\frac{1}{4}$	$1\frac{1}{4}$	29	3	6
42	18	5	7	$1\frac{3}{8}$	$\frac{7}{8}$	23	3	7
42	24	5	7	$1\frac{3}{8}$	1	27	3	1
42	27	5	7	$1\frac{3}{8}$	$1\frac{1}{16}$	32	3	24

Note.—Sockets and Spigots are to be of standard dimensions given on page 191.

Socket and Spigot Cast-iron Taper Pipes—(*contd.*)

DIAMETER OF TAPER PIPES.		Length exclusive of Socket L.		THICKNESS.		Weight.		
D Socket end.	D_1 Spigot end.			From	To			
inches.	inches.	ft.	ins.	inches.	inches.	cwts.	qrs.	lbs.
42	36	5	7	$1\frac{3}{8}$	$1\frac{1}{16}$	34	1	3
48	18	6	1	$1\frac{9}{16}$	$\frac{7}{8}$	30	1	25
48	27	6	1	$1\frac{9}{16}$	$1\frac{1}{16}$	32	3	13
48	30	6	1	$1\frac{9}{16}$	$1\frac{1}{4}$	41	2	20
48	36	6	1	$1\frac{9}{16}$	$1\frac{1}{4}$	43	3	0
48	42	6	1	$1\frac{9}{16}$	$1\frac{3}{8}$	44	2	6

Note.—Sockets and Spigots are to be of standard dimensions given on page 191.

FLANGED CAST-IRON TAPER PIPES FOR CONNECTING SLUICE VALVES WITH MAINS.

Diameter of Taper Pipes.		Length inclusive of Flange thickness.		Thickness.		Weight of each Casting.		
Socket or Spigot end.	Flanged end.			From	To			
inches.	inches.	ft.	ins.	inches.	inches.	cwts.	qrs.	lbs.
14	12	1	3½	13/16	¾	1	2	22
14	12	2	1½	13/16	¾	2	2	3
16	12	2	1	13/16	¾	2	1	14
16	12	3	8½	13/16	¾	4	0	3
18	12	2	4½	⅞	¾	3	0	25
18	12	4	3½	⅞	¾	5	1	18
20	12	3	1	15/16	¾	4	1	10
20	12	5	8½	15/16	¾	7	2	6
24	18	2	6	1	⅞	5	1	17
24	18	4	6	1	⅞	9	0	5
27	18	3	9	1 1/16	⅞	8	2	8
27	18	7	0	1 1/16	⅞	18	2	26
30	18	4	7½	1⅛	⅞	11	2	0
30	18	8	9	1⅛	⅞	20	3	7
33	18	5	5	1¼	⅞	15	1	11
33	18	9	4	1¼	⅞	25	2	6
36	24	4	6	1¼	1	15	2	27
36	24	8	6	1¼	1	28	1	3
42	36	4	11	1 9/16	1¼	26	0	20
36	24	8	0	1¼	1	28	3	25
42	24	6	8½	1⅜	1	50	1	22

Note.—Sockets and Spigots are to be of standard dimensions given on page 191.

CAST-IRON COLLARS.

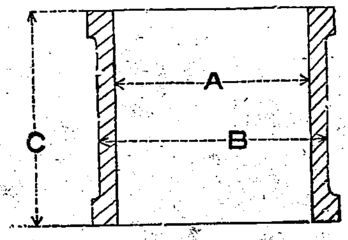

Internal Diameter of Pipes.	A.	B.	C.	Total.		
inches.	inches.	inches.	inches.	cwts.	qrs.	lbs.
2	$3\frac{1}{8}$	$4\frac{1}{8}$	6	0	0	11
$2\frac{1}{2}$	$3\frac{3}{4}$	$4\frac{7}{8}$	7	0	0	17
3	$4\frac{3}{8}$	$5\frac{1}{2}$	8	0	0	22
4	$5\frac{3}{8}$	$6\frac{1}{2}$	8	0	0	26
5	$6\frac{7}{16}$	$7\frac{11}{16}$	8	0	1	2
6	$7\frac{5}{8}$	$8\frac{7}{8}$	8	0	1	6
7	$8\frac{3}{4}$	$10\frac{3}{16}$	8	0	1	17
8	$9\frac{3}{4}$	$11\frac{3}{16}$	9	0	1	27
9	$10\frac{7}{8}$	$12\frac{1}{2}$	9	0	2	0
10	$11\frac{7}{8}$	$13\frac{1}{2}$	9	0	2	24
12	14	$15\frac{13}{6}$	9	0	3	19
14	$16\frac{1}{8}$	$18\frac{1}{16}$	9	1	0	4
16	$18\frac{1}{4}$	$20\frac{3}{8}$	9	1	1	16
18	$20\frac{3}{8}$	$22\frac{1}{6}$	9	1	2	19
20	$22\frac{1}{2}$	$24\frac{15}{16}$	9	1	3	17
24	$26\frac{3}{4}$	$29\frac{9}{16}$	10	2	3	18
27	$29\frac{3}{4}$	$32\frac{9}{16}$	10	3	0	23
30	$32\frac{13}{16}$	$35\frac{11}{16}$	10	3	2	16
33	$35\frac{13}{16}$	$38\frac{11}{16}$	10	4	0	0
36	$38\frac{7}{8}$	$41\frac{7}{8}$	12	5	1	16
42	45	$48\frac{1}{8}$	12	6	1	26
48	$51\frac{1}{4}$	55	12	8	3	11

CAST-IRON SADDLES.

Single Straps for Pipes 9 inches diameter and below. Double Straps for Pipes over 9 inches diameter.

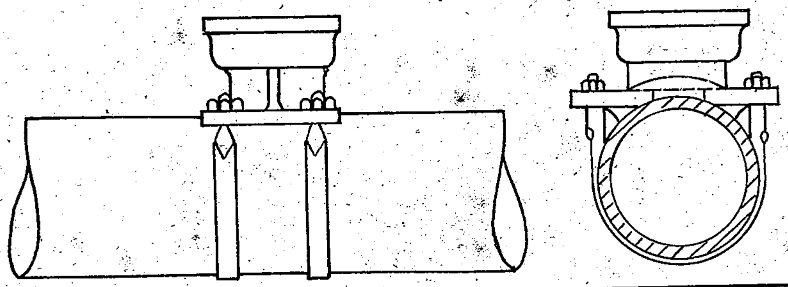

Internal Diameter in Inches.		Rate per Saddle including Straps.			Internal Diameter in Inches.		Rate per Saddle including Straps.		
Main.	Branch.	Rs.	A.	P.	Main.	Branch.	Rs.	A.	P.
4	4	21	12	0	10	4	22	10	0
5	4	21	12	6	10	5	27	2	0
5	5	26	4	6	10	6	31	6	0
6	3	17	13	6	10	7	35	14	0
6	4	21	13	6	10	8	40	8	0
6	5	26	5	6	10	9	53	6	0
6	6	30	9	6	12	4	22	13	0
7	4	21	14	0	12	5	27	5	0
7	5	26	6	0	12	6	31	9	0
7	6	30	10	0	12	7	36	1	0
7	7	35	2	0	12	8	40	11	0
8	4	21	15	0	12	9	53	9	0
8	5	26	7	0	14	4	23	0	0
8	6	30	11	0	14	5	27	8	0
8	7	35	3	0	14	6	31	12	0
8	8	39	13	0	14	9	53	12	0
9	4	22	0	0	16	4	23	6	0
9	5	26	8	0	16	6	31	15	0
9	6	30	12	0	16	9	53	15	0
9	7	35	4	0	18	4	23	6	0
9	8	39	14	0	18	6	32	2	0
9	9	53	4	0	18	7	36	10	0

Cast-iron Saddles—(*contd.*)

Internal Diameter in Inches.		Rate per Saddle including Straps.			Internal Diameter in Inches.		Rate per Saddle including Straps.		
Main.	Branch.	Rs.	A.	P.	Main.	Branch.	Rs.	A.	P.
18	9	54	2	0	27	7	37	9	0
20	4	23	10	2	27	9	55	1	0
20	6	32	6	2	30	4	24	8	0
20	9	54	6	2	30	6	33	4	0
21	4	23	11	0	30	9	55	4	0
21	6	32	7	0	33	4	24	14	0
21	9	54	6	0	33	6	33	10	0
22	4	23	12	0	33	9	55	10	0
22	6	32	8	0	36	4	25	4	0
22	9	54	8	0	36	6	34	0	0
24	4	24	2	0	36	9	56	0	0
24	6	32	14	0	42	4	26	0	0
24	9	54	14	0	42	6	34	12	0
27	4	24	5	0	42	9	56	12	0
27	6	33	1	0					

SLUICE VALVES.

Sluice valves fitted with four gun-metal faces, two on body and two on valve door with gun-metal screwed spindle and gun-metal nut and with socket and spigot ends bolted on all valves 12 inches and under.

All flanges to be of standard dimensions in accordance with Table 1 of the British Engineering Standards Committee's Specification of Cast-iron Pipe Flanges, and all holes to be accurately drilled.

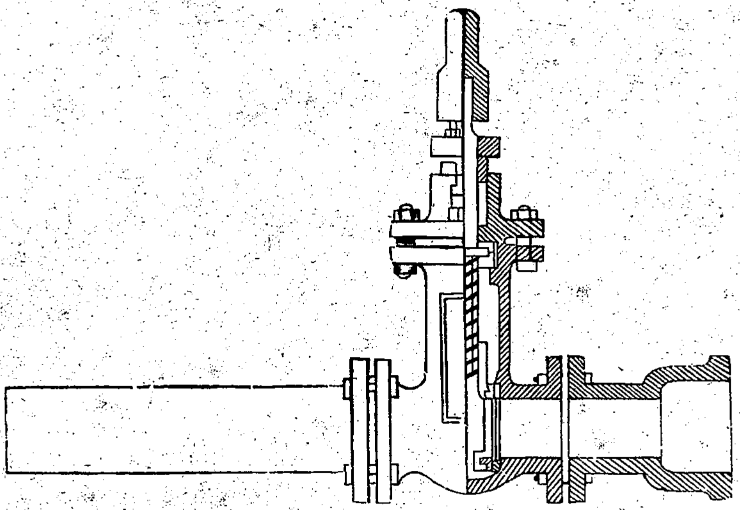

Diameter of Valve.	Diameter of Flanges.	Diameter of Bolt Circle.	Length over Flanges.	Thickness of Flanges.	Number of Bolts in Flanges.	Diameter of Bolts.	Height from top of pipe to top of cap on spindle.	Rate per Sluice Valve.			Extra cost for Socket and Spigot Cast-iron Tail pieces.		
Dimensions in inches.						inches.	inches.	Rs.	A.	P.	Rs.	A.	P.
2½	6½	5	9¼	¾	4	⅝	17¼	20	0	0	5	0	0
3	7¼	5¾	9⅜	¾	4	⅝	18⅝	23	0	0	7	0	0
4	8½	7	9⅝	⅞	4	⅝	20¼	31	0	0	9	0	0
5	10	8¼	10	⅞	8	⅝	21¼	38	0	0	12	0	0
6	11	9¼	10¾	⅞	8	⅝	22⅝	46	0	0	14	0	0
7	12	10¼	11¼	1	8	⅝	24	53	0	0	17	0	0
8	13¼	11½	11⅝	1	8	⅝	26⅛	69	0	0	21	0	0
9	14½	12¾	13⅝	1	8	⅝	27⅞	74	0	0	26	0	0
10	16	14	15	1	8	¾	29	86	0	0	34	0	0
12	18	16	16	1⅛	12	¾	31¾	120	0	0	42	0	0
14	20¾	18½	17⅛	1¼	12	⅞	35⅜	186	0	0	63	0	0
16	22¾	20½	18½	1¼	12	⅞	37¼	240	0	0	72	0	0
18	25¼	23	19⅝	1⅜	12	⅞	41⅛	280	0	0	80	0	0
20	27¾	25¼	20¾	1½	16	⅞	43⅜	350	0	0	106	0	0
21	29	26½	21⅛	1½	16	⅞	46¼	370	0	0	120	0	0
22	30	27½	22	1½	16	1	46½	390	0	0	129	0	0
24	32½	29¾	22	1⅝	16	1	49½	460	0	0	144	0	0

EXCAVATION.

Laying Cast-iron Pipes for Mains, Pipes to existing Hydrants, Fountains and House Connections.

	Diameter of Pipes.	Average Excavation per foot run.		Total cubic feet per foot run.	Rates per foot run @ Rs. 2 per 100 cubic feet.		
		Breadth.	Depth.				
	inches.	feet.	feet.		Rs.	A	P.
Fountains and House Connections.	2	2	2	4	0	1	3
Hydrants	2½	2½	3	8	0	2	7
Mains	3	3	4	12	0	3	10
	4	3	4½	14	0	4	6
	5	3	4½	14	0	4	6
	6	3½	4¾	17	0	5	5
	7	3½	4¾	17	0	5	5
	8	3½	4¾	17	0	5	5
	9	3½	5	18	0	5	9
	10	3½	5	18	0	5	9
	12	3¾	5¼	20	0	6	5
	14	3¾	5¼	20	0	6	5
	16	3¾	5½	21	0	6	9
	18	4	5¾	23	0	7	4
	20	4	5¾	23	0	7	4
	24	4½	6¼	28	0	9	0
	27	4½	6½	29	0	9	3
	30	5	6¾	34	0	10	11
	33	5	7	35	0	11	2
	36	5½	7½	42	0	13	6
	42	6	8	48	0	15	4
	48	7	8	56	1	1	11

Note.—The rate includes excavation, timbering, dealing with water, refilling, ramming, lighting, watching, removing surplus excavation, and restoration of road surface.

LAYING AND JOINTING WITH LEAD JOINTS.

Straight Socket and Spigot Cast-iron Pipes, Socket and Spigot Cast-iron Bends, Branches on Mains, Branches on Hydrant and Fountain Connections, Tapers and Collars on Mains, Hydrant and Fountain Connections.

Diameter of Pipes.	Standard length of each Pipe exclusive of Socket.	Laying Cast-iron Pipes.			Jointing Cast-iron Pipes and Specials with Lead Joints.					
		Rate per foot.			Rate per Joint.			Rate of Joint per foot.		
inches.	feet.	Rs.	A.	P.	Rs.	A.	P.	Rs.	A.	P.
2	6	0	0	6	0	8	0	0	1	4
2½	9	0	0	9	0	10	0	0	1	2
3	9	0	1	0	0	12	0	0	1	4
4	9	0	1	3	1	0	0	0	1	7
5	9	0	1	6	1	4	0	0	2	2
6	9	0	1	9	1	8	0	0	2	6
7	9	0	2	0	1	12	0	0	3	1
8	9	0	2	3	2	0	0	0	3	5
9	9	0	2	6	2	4	0	0	4	0
10	12	0	2	9	2	8	0	0	3	4
12	12	0	3	0	3	0	0	0	4	0
14	12	0	3	6	3	8	0	0	4	8
16	12	0	4	6	4	8	0	0	6	0
18	12	0	5	0	5	0	0	0	6	8
20	12	0	5	6	5	8	0	0	7	4
24	12	0	7	0	7	0	0	0	9	4
27	12	0	9	0	9	0	0	0	12	0
30	12	0	9	6	9	0	0	0	12	0
33	12	0	9	9	9	8	0	0	12	8
36	12	0	10	0	10	0	0	0	13	4
42	12	0	12	0	12	0	0	1	0	0
48	12	1	0	0	16	0	0	1	5	4

Note.—Rates for laying includes conveying Pipe to site, lowering into trench and placing in position.

Rate for jointing includes lead, yarn and labour.

SUMMARY OF UNIT COSTS USED IN THE FOLLOWING ESTIMATES.

Socket and Spigot Cast-iron Pipes laid complete.

Pipe Laying—Prices per Lineal foot.

Diameter of Pipes.	Pipe at Trench side.			Excavation, including Restoring Road Surface. See Page 211.				Laying and Jointing. See page 212. Laying.			Laying and Jointing. See page 212. Jointing.			Total.		
inches.	Rs.	A.	P.	Average depth in feet.	Rs.	A.	P.	Rs.	A.	P.	Rs.	A.	P.	Rs.	A.	P.
2	0	8	0	2	0	1	3	0	0	6	0	1	4	0	11	1
2½	0	9	4	3	0	2	7	0	0	9	0	1	2	0	13	10
3	0	11	0	4	0	3	10	0	1	0	0	1	4	1	1	2
4	0	14	8	4½	0	4	6	0	1	3	0	1	7	1	6	0
5	1	3	6	4½	0	4	6	0	1	6	0	2	2	1	11	8
6	1	11	4	4¾	0	5	5	0	1	9	0	2	6	2	5	0
7	2	0	6	4¾	0	5	5	0	2	0	0	3	1	2	11	0
8	2	4	10	4¾	0	5	5	0	2	3	0	3	5	2	15	11
9	2	14	7	5	0	5	7	0	2	6	0	4	0	3	10	8
10	3	1	11	5	0	5	7	0	2	9	0	3	4	3	13	7
12	4	4	1	5¼	0	6	3	0	3	0	0	4	0	5	1	4
14	5	6	9	5¼	0	6	3	0	3	6	0	4	8	6	5	2
16	6	1	1	5½	0	6	7	0	4	0	0	6	0	7	1	8
18	7	6	10	5¾	0	7	4	0	5	0	0	6	8	8	9	10
20	8	15	0	5¾	0	7	4	0	5	6	0	7	4	10	3	2
24	11	7	4	6¼	0	9	0	0	7	0	0	9	4	13	0	8
27	13	12	0	6½	0	9	4	0	9	0	0	12	0	15	10	4
30	16	5	4	6¾	0	10	10	0	9	6	0	12	0	18	5	8
33	20	3	2	7	0	11	2	0	9	9	0	12	8	22	4	9
36	21	1	8	7½	0	13	2	0	10	0	0	13	4	23	6	2
42	28	9	11	8	0	15	4	0	12	0	1	0	0	31	5	3
48	37	7	9	8	1	1	11	1	0	0	1	5	4	40	15	0

CUTTING MAINS AND FIXING CAST-IRON SADDLES FOR CONNECTING THE EXISTING MAINS TO NEW SYSTEM.

Internal Diameter.		Rates per Joint.			Internal Diameter.		Rates per Joint.		
Main.	Branch				Main.	Branch.			
inches.	inches.	Rs.	A.	P.	inches.	inches.	Rs.	A.	P.
5	4	1	4	0	14	4	3	4	0
6	3	1	8	0	14	5	3	8	0
6	4	1	8	0	14	6	3	8	0
6	5	1	12	0	16	4	4	0	0
6	6	3	0	0	18	4	4	8	0
7	4	1	12	0	18	7	4	8	0
7	7	2	8	0	20	4	5	0	0
8	4	2	0	0	21	4	5	8	0
8	8	3	0	0	22	4	5	8	0
9	4	2	4	0	24	4	6	0	0
9	7	2	8	0	27	4	6	12	0
10	4	2	8	0	27	7	7	8	0
10	5	2	8	0	30	4	7	8	0
12	4	3	0	0	36	4	9	0	0
12	5	3	0	0	42	4	10	8	0
12	7	3	0	0					

Note.—Rate includes labour in cutting mains and fixing saddles. Cost of saddles is given on pages 208 and 209.

ESTIMATES.

B.

DETAILED ESTIMATES OF COST OF HEAD WORKS OF THE WATER DISTRIBUTION SYSTEM FOR THE CITY OF MADRAS.

	PAGES
Pumping Station, Design No. 1	216 to 220
Square Chimney for Pumping Station, Design No. 1	221 and 222
Pumping Station, Design No. 2	223 to 226
Circular Chimney for Pumping Station, Design No. 2	227 and 228
Elevated Tank	229 to 231
Connections of the new 48-inch Pumping Main to existing and proposed new Distribution Mains	232 ,, 234

PUMPING STATION, DESIGN No. 1.

Quantity.		Description of Works.	Rate. Rs.	A.	P.	Per	Amount. Rs.	A.	P.
		Suction Chamber and Culvert—(*see* Drawing No. 4.)							
11,209	c. ft.	Earthwork excavation all below Engine House Floor including timbering, refilling, ramming, dealing with water, removing surplus earth, etc., complete ...	2	0	0	100 c. ft.	224	0	10
5,907	„	Concrete in cement mortar (1—3—6) in floor and side walls ...	50	0	0	„	2,953	8	0
3,852	„	Best table moulded brickwork in combination mortar in walls ...	45	0	0	„	1,733	6	4
372	„	Best table moulded brickwork in combination mortar in invert ...	48	0	0	„	178	8	11
442	„	Best table moulded brickwork in combination mortar archwork ...	50	0	0	„	221	0	0
68	„	Best Sholinghur granite stone under rails neatly dressed laid in cement complete	3	8	0	1 c. ft.	238	0	0
2,323	sq. ft.	Plastering in cement mortar ¾" thick in floor sides and soffit, 1 cement to 3 of sand	8	8	0	100 sq. ft.	197	7	2
		Engine and Engine House and Boiler and Boiler House Foundations—(*see* Drawing No. 4.)							
71,155	c. ft.	Earthwork excavation including timbering, refilling, ramming, dealing with water, removing surplus earth, etc., complete ...	1	0	0	100 c. ft.	711	8	10
20,487	„	Concrete in cement mortar (1—3—6) in foundation ...	50	0	0	„	10,243	8	0
26,946	„	Best table moulded brick in combination mortar in foundations of engines and buildings below floor level	45	0	0	„	12,125	11	2
362	„	Best table moulded brick in combination mortar in archwork ...	50	0	0	„	181	0	0
528	„	Best Sholinghur granite stone under machinery neatly dressed laid in cement complete	3	8	0	1 c. ft.	1,848	0	0
12,013	sq. ft.	Plastering in cement mortar ¾" thick, 1 cement to 3 of sand, on concrete floor and brick walls, etc.	8	8	0	100 sq. ft.	1,021	1	8
		Carried forward ...	...	...	...		31,876	14	11

Pumping Station, Design No. 1—(*contd.*)

Quantity.		Description of Works.	Rate.			Per	Amount.		
			Rs.	A.	P.		Rs.	A.	P.
		Brought forward ...	...	...	...		31,876	14	11
		Economiser and Flue.							
398	c. ft.	Earthwork excavation including timbering, refilling, ramming, dealing with water, removing surplus earth, etc., complete ...	1	0	0	100 c. ft.	3	15	8
960	sq. ft.	Plastering in cement mortar ¾" thick, 1 of neat cement to 3 of sand, on outside of part of flue and economiser	8	8	0	100 sq. ft	81	9	7
1,611	c. ft.	Best table moulded brick in combination mortar in walls of flues and economiser	45	0	0	100 c. ft.	724	15	2
682	"	Concrete in cement mortar in foundations	50	0	0	"	341	0	0
769	"	Fire brickwork in fire clay in flues and economiser	190	0	0	"	1,461	1	7
		Note.—Iron work is included in contract for Pumping Machinery.							
		Flooring to Engine House.							
3,072	sq. ft.	Main Flooring of Engine House to consist of reinforced concrete slabs covered with tiles supported on rolled steel beams, and provided with Hayward's Lights as shown on Drawing No. 4	4	0	0	1 sq. ft	12,288	0	0
3,975	"	Flooring of Boiler House and North end of Engine House of combination mortar concrete covered with tiles	1	0	0	"	3,975	0	0
		Superstructure of Engine House and Boiler House—(*see* Drawings Nos. 3, 6 & 7.)							
40,656	c. ft.	Table moulded brick in lime-surki mortar in superstructure including all scaffolding	38	0	0	100 c. ft.	15,449	4	6
2,625	"	Table moulded brick in lime-surki mortar in superstructure in arches including all centres, etc. ...	41	0	0	"	1,076	4	0
26	"	Table moulded brick in lime-surki mortar in superstructure in corbelling to support Porch arches.	0	8	0	1 c. ft.	13	0	0
		Carried forward ...	...	...	...	...	67,291	1	5

Pumping Station, Design No. 1—(*contd.*)

Quantity.		Description of Works.	Rate.			Per	Amount.		
			Rs.	A.	P.		Rs.	A.	P.
		Brought forward ...	...	...	...		67,291	1	5
3,594	c. ft.	Best special table moulded bricks in lime-surki mortar including plastering, timbering, etc. Complete for four domes at corners ...	0	10	0	c. ft.	2,246	4	0
1,198	l. ft.	Brick corbelling work in lime-surki mortar 12″ × 4″ projection, 4 courses of bricks, including colour washing, pointing, etc., complete, to support granite eaves brackets.	0	6	0	1 l. ft.	449	4	0
1,600	,,	,, in window panels, etc. ...	0	5	0	,,	500	0	0
323	,,	Table moulded brick in lime-surki mortar, including colour washing, pointing, etc., complete in parapet over eaves as per drawing ...	1	4	0	,,	403	12	0
331	c. ft.	Best Sholinghur granite neatly dressed and fixed in cement mortar, in keystones of arches complete ...	3	8	0	1 c. ft.	1,158	8	0
390	,,	Best Sholinghur granite stone neatly dressed and fitted in cement mortar in templates under box-girders, complete	2	8	0	,,	975	0	0
110	,,	Sholinghur granite stone urns neatly dressed and fixed in cement over parapet pedestals, etc., complete ...	5	0	0	,,	550	0	0
1,587	,,	Sholinghur granite stone corbels, fixed in cement under eaves as per drawing complete	4	0	0	,,	6,348	0	0
183	,,	Sholinghur granite stone brackets, fixed in cement, supporting verandah roof as per drawing complete.	4	8	0	,,	823	8	0
2,882	sq. ft.	Reinforced stone jelly cement concrete, 2″ thick, in eaves including timbering, etc., complete with cement washing	25	0	0	100 sq. ft.	720	8	0
3,170	,,	Expanded metal, 1½″ mesh laying and fixing complete for above ...	0	4	0	1 sq. ft.	792	8	0
1,452	,,	Reinforced stone jelly cement concrete, 4″ thick, including cement washing, timbering, etc., complete in tower floors	45	0	0	100 sq. ft.	653	6	5
2,016	,,	Expanded metal, 3″ mesh laying and fixing complete for above ...	0	4	0	1 sq. ft.	504	0	0
		Carried forward ...	...	...	...		83,415	11	10

Pumping Station, Design No. 1—(*contd.*)

Quantity.		Description of Works.	Rate.			Per	Amount.		
			Rs.	A.	P.		Rs.	A.	P.
		Brought forward ...	...	...	...		83,415	11	10
824	sq. ft.	Reinforced stone jelly cement concrete, 5″ thick, including cement washing, timbering, etc., complete in porch roof	55	0	0	100 sq. ft.	453	3	2
8,924	,,	Painting doors and windows, etc., with one coat of priming, two coats of oil colour paints in two colours and one coat of varnish, etc., complete	4	8	0	,,	401	8	11
108	,,	Best Cuddapah slabs, 3″ thick, apron for rain water spouts fixing in cement, etc., complete ...	35	0	0	,,	37	12	9
24,080	,,	Plastering interior lime mortar with four coats	4	0	0	,,	963	3	2
28,818	,,	Raking out interstices, colour washing, pointing in cement, striking surfaces of brickwork complete	5	0	0	,,	1,440	14	5
1,272	,,	Damp course in bitumen sheeting, including laying, etc., complete ...	0	8	0	1 sq. ft.	636	0	0
1,818	,,	Teak doors with frames, ⅓ panelled, ⅔ venetianed hinges, nails, etc., complete	1	8	0	,,	2,727	0	0
2,196	,,	Teak windows fully glazed with frames, hinges, nails, etc., with fixing complete	1	0	0	,,	2,196	0	0
364	,,	Teak windows fully venetianed with frames, hinges, nails, etc., fixing complete	1	8	0	,,	546	0	0
63	cwts.	Rolled steel girders with bolts and nuts, hoisting fixing in position and painting complete ...	9	0	0	1 cwt.	567	0	0
145	c. ft.	Brick corbelling work in lime-surki mortar 2′ 3″ × 2′ with 9″ projection from the face of wall including plastering, etc., complete, to support box-girders	0	8	0	1 c. ft	72	8	0
315	l. ft.	Cast-iron rain water pipes with bends, 4″ square including jointing, staples, wood blocks, nails, etc., fixing in position complete ...	0	15	0	1. ft.	295	5	0
400	lbs.	Lightning conductor copper tape terminating tree including nails, straps, copper earth plate, etc., complete with fixing and soldering, etc., as per drawing ...	1	2	0	1 lb.	450	0	0
		Carried forward ...	...	...	...		94,202	3	3

Pumping Station, Design No. 1—(*concld.*)

Quantity.		Description of Works.	Rate.			Per	Amount.		
			Rs.	A.	P.		Rs.	A.	P.
		Brought forward ...	...	...	...		94,202	3	3
40	No.	Bags of coke for lightning conductor copper earth plate ...	1	4	0	1 No.	50	0	0
4	"	Testing charges for the lightning conductor with necessary instruments	30	0	0	"	120	0	0
320	c. ft.	Archwork, best table moulded brick in combination mortar, including all centres, etc.	50	0	0	100 c. ft.	160	0	0
18	cwts.	$\frac{1}{8}$ inch lead sheets to be laid under box-girder bearing	16	0	0	1 cwt.	288	0	0
144	tons	Best steel box-girders with rivets, bolts and nuts, etc., hoisting and fixing in position and painting 3 coats complete	220	0	0	1 ton	31,680	0	0
7,636	sq. ft.	Roofing Seigwart beam, concrete over beams 2″ thick, plastered and covered with malthoid; supplying and fixing, etc., complete	85	0	0	100 sq. ft.	6,489	12	0
1,276	"	Reinforced stone jelly cement concrete, 3″ thick, including cement washing, timbering, etc., complete in verandah roof	35	0	0	"	446	9	7
1,400	"	Expanded metal for above roof, laying and fixing, etc., complete, 3″ mesh	0	4	0	1 sq. ft.	350	0	0
4,960	"	Road-making, with 4″ blue granite, and 2″ laterite-gravel spreading, laying, watering and ramming, etc., complete	21	0	0	"	1,041	9	7
215	c. ft.	Fine cement concrete cambering over box-girder 1 to 1 complete, including centering	1	0	0	1 c. ft.	215	0	0
		Clearing Site, hoarding, shoring, timbering, etc., complete, inclusive of labour and materials ...	...	...	...		6,000	0	0
		Scaffolding charges for four towers	...	...	...		1,000	0	0
							1,42,043	2	5
		Supervision and contingencies 15% say		...	...		21,306	13	7
		Total carried to summary page ...	...	...	...		1,63,350	0	0

SQUARE CHIMNEY FOR PUMPING STATION, DESIGN No. 1.

Quantity.		Description of Works.	Rate. Rs.	A.	P.	Per	Amount. Rs.	A.	P.
17,340	c. ft.	Earthwork excavation including timbering, dealing with water, ramming, refilling and removing surplus, etc., complete ...	1	8	0	100 c. ft.	260	1	1
6,936	„	Concrete in combination mortar in foundation	35	0	0	„	2,427	9	7
5,280	„	Brick in combination mortar in foundation	35	0	0	„	1,848	0	0
628	„	Brick in lime-surki mortar from ground level to 2 ft. high ...	37	0	0	„	232	5	9
2,592	„	„ „ from 2 ft. to 11 ft.	39	0	0	„	1,010	14	1
4,347	„	„ „ „ 11 „ 34 „	42	0	0	„	1,825	11	10
1,323	„	„ „ „ 34 „ 41 „	45	0	0	„	595	5	7
2,280	„	„ „ „ 41 „ 60 „	48	0	0	„	1,094	6	5
2,032	„	„ „ „ 60 „ 77½ „	51	0	0	„	1,036	5	1
1,601	„	„ „ „ 77½ „ 94 „	54	0	0	„	864	8	7
924	„	„ „ „ 94 „ 108 „	58	0	0	„	535	14	8
689	„	„ „ „ 108 „ 121 „	62	0	0	„	427	2	10
480	„	„ „ „ 121 „ 133 „	66	0	0	„	316	12	9
319	„	„ „ „ 133 „ 144 „	70	0	0	„	223	4	9
264	„	„ „ „ 144 „ 150 „	75	0	0	„	198	0	0
540	„	Firebrick in fire clay in chimney lining complete	190	0	0	„	1,026	0	0
184	„	Sholinghur best granite stone corbels, in eaves courses neatly dressed and fixed in cement, complete as per drawing... ...	4	8	0	1 c. ft.	828	0	0
406	sq. ft.	Expanded metal, 1½″ mesh laying, fixing complete for concrete in next item	0	4	0	1 sq. ft.	101	8	0
348	„	Reinforced concrete, 2½″ thick, in corbel eaves, including cement washing, timbering complete ...	30	0	0	100 sq. ft.	104	6	5
1	No.	Iron door complete	40	0	0	1 No.	40	0	0
1	„	Cast-iron cap at chimney top ...	300	0	0	„	300	0	0
		Carried forward ...	...	...	...		15,296	5	5

Square Chimney for Pumping Station, Design No. 1—(*concld.*)

Quantity.	Description of Works.	Rate. Rs.	A.	P.	Per	Amount. Rs.	A.	P.
	Brought forward...	...	...	...		15,296	5	5
1 No.	Lightning conductor with copper band, wood blocks, nails, ornamental terminating tree to be 6′ from top of chimney, 3′ square copper earth plate, coke, etc., fixing and testing complete ...	350	0	0	1 No.	350	0	0
836 sq. ft.	Raking out interstices, colour washing, pointing in cement mortar, striking surfaces of brickwork in tar, complete from ground level to 11 feet	5	0	0	100 sq. ft.	42	12	10
1,920 "	" " 11 ft. to 41 ft.	5	8	0	"	105	14	0
1,026 "	" " 41 " 60 "	6	0	0	"	75	1	0
893 "	" " 60 " 77½ "	6	12	0	"	60	4	5
792 "	" " 77½ " 94 "	7	8	0	"	59	6	4
588 "	" " 94 " 108 "	8	4	0	"	43	3	8
507 "	" " 108 " 121 "	9	0	0	"	45	10	1
432 "	" " 121 " 133 "	10	0	0	"	43	3	2
363 "	" " 133 " 144 "	11	0	0	"	39	14	5
222 "	" " 144 " 150 "	12	0	0	"	26	10	2
						16,188	5	6
	Scaffolding charges ...	...	...	...		811	10	6
						17,000	0	0
	Supervision and unforeseen, etc., at 15 %, say	...	...	...		2,500	0	0
	Total carried to summary page ...	...	...	...		19,500	0	0

PUMPING STATION, DESIGN No. 2.

Quantity.		Description of Works.	Rate. Rs.	A.	P.	Per	Amount. Rs.	A.	P.
		Suction Chamber and Culvert Foundations—(*see* **Drawing No. 4.**)							
11,209	c. ft.	Earthwork excavation all below Engine House Floor, including timbering, refilling, ramming, dealing with water, removing surplus earth, etc., complete ...	2	0	0	100 c. ft.	224	2	10
5,907	„	Concrete in cement mortar (1—3—6) in floor and side walls ...	50	0	0	„	2,953	8	0
3,852	„	Best table moulded brickwork in combination mortar in walls ...	45	0	0	„	1,733	6	4
372	„	Best table moulded brickwork in combination mortar in invert ...	48	0	0	„	178	8	11
442	„	Best table moulded brickwork in combination mortar archwork ...	50	0	0	„	221	0	0
68	„	Best Sholinghur granite stone under rails neatly dressed laid in cement complete	3	8	0	1 c. ft.	238	0	0
2,323	sq. ft.	Plastering in cement mortar ¾" thick in floor sides and soffit, 1 cement to 3 of sand	8	8	0	100 sq. ft.	197	7	2
		Engine and Engine House and Boiler and Boiler House Foundations—(*see* **Drawing No. 4.**)							
71,155	c. ft.	Earthwork excavation including timbering, refilling, ramming, dealing with water, removing surplus earth, etc., complete ...	1	0	0	100 c. ft.	711	8	10
20,487	„	Concrete in cement mortar (1—3—6) in foundation	50	0	0	„	10,243	8	0
26,946	„	Best table moulded brick in combination mortar in foundations of engine and buildings below floor level	45	0	0	„	12,125	11	2
362	„	Best table moulded brick in combination mortar in archwork ...	50	0	0	„	181	0	0
528	„	Best Sholinghur granite stone under machinery neatly dressed laid in cement complete	3	8	0	1 c. ft.	1,848	0	0
12,013	sq. ft.	Plastering in cemet mortar ¾" thick, 1 cement to 3 of sand, in concrete floor and brick walls, etc.	8	8	0	100 sq. ft.	1,021	1	8
		Carried forward ...	...	...	...		31,876	14	11

Pumping Station, Design No. 2—(*contd.*)

Quantity.	Description of Works.	Rate.			Per	Amount.		
		Rs.	A.	P.		Rs.	A.	P
	Brought forward ...	...	...	...		31,876	14	11
	Economiser and Flue.							
398 c. ft.	Earthwork excavation including timbering, refilling, ramming, dealing with water, removing surplus earth, etc., complete ...	1	0	0	100 c. ft.	3	15	8
960 sq. ft.	Plastering in cement mortar ¾" thick, 1 of neat cement to 3 of sand, on outside of part of flue and economiser	8	8	0	100 sq. ft.	81	9	7
1,611 c. ft.	Best table moulded brick in combination mortar in walls of flues and economiser	45	0	0	100 c. ft.	724	15	2
682 „	Concrete in cement mortar in foundation	50	0	0	„	341	0	0
769 „	Fire brickwork in fire clay in flues and economiser	190	0	0	„	1,461	1	7
	Note.—Iron work is included in contract for Pumping Machinery.							
	Flooring to Engine House.							
3,072 sq. ft.	Main flooring of Engine House to consist of reinforced concrete slabs covered with tiles supported on rolled steel beams, and provided with Hayward's Lights as shown on Drawing No. 4 ...	4	0	0	1 sq. ft.	12,288	0	0
3,975 „	Flooring of Boiler House and north end of Engine House of combination mortar concrete covered with tiles	1	0	0	„	3,975	0	0
	Superstructure of Engine House and Boiler House—(*see* Drawing No. 18.)							
16,401 c. ft.	Best country brick in lime-surki mortar in superstructure ...	27	0	0	100 c. ft.	4,428	4	4
955 „	„ „ in archwork ...	32	0	0	„	305	9	7
1,454 sq. ft.	Teak doors ½ panelled, ½ venetianed, frames, hinges, etc., complete.	1	8	0	1 sq. ft.	2,181	0	0
708 „	Teak windows, fully glazed, frames, hinges, etc., complete ...	1	0	0	„	708	0	0
242 „	Teak circular frame, fixed venetianed windows, etc., complete ...	1	6	0	„	332	12	0
	Carried forward ...	...	...	...		58,708	2	10

Pumping Station, Design No. 2—(*contd.*)

Quantity.	Description of Works.	Rate. Rs.	A.	P.	Per	Amount. Rs.	A.	P.
	Brought forward ...	...	...	...		58,708	2	10
705 c. ft.	Teakwood wrought and put up in verandah, etc., including nailing, complete	4	8	0	1 c. ft.	3,172	8	0
658 sq. ft.	Teak plank ¾ inch thick eave board, panels, etc., in verandah, including nailing, complete ...	0	8	0	1 sq. ft.	329	0	0
5,271 „	Roofing verandah with best Mangalore tiles, half tiles, ridge tiles, 2″ × ½″ reepers, ¾″ lime plastering, 6″ × 6″ × ¾″ flat tiles, reepers, etc., including nailing, complete ...	25	0	0	100 sq. ft.	1,317	12	0
3 No.	Teakwood ornamental finials over porch, 2 ft. high, including nailing, etc., complete	3	0	0	1 No.	9	0	0
402 l. ft.	Cornice, 18″ × 12″ brick, in lime mortar, including plastering, as per drawing, complete ...	0	6	0	1 l. ft.	150	12	0
428 „	Cornice dental 9″ × 12″ × 4″ brick in lime-surki mortar with plastering, etc., complete	0	7	0	„	187	4	0
411 „	String course stout, 6″ × 4″ brick in lime-surki mortar, with plastering, etc., complete	0	4	0	„	102	12	0
1,078 „	String course, ordinary, 3″ × 2″ ...	0	2	0	„	134	12	0
8,787 sq. ft.	Plastering exterior three coats of lime mortar	3	8	0	100 sq. ft.	307	8	9
15,786 „	„ interior four coats ...	4	8	0	„	710	5	11
7,494 „	Roofing galvanized corrugated iron sheets with double sheeting, limpet washers, bolts and nuts, including saw-dust, etc., complete.	65	0	0	100 sq. ft.	4,871	1	7
13,218 „	Painting doors and windows, wood works of verandah, etc., one coat of priming, two coats oil paint in two colours and one coat of varnish, complete	4	8	0	„	594	13	0
314 l. ft.	Zinc sheet guttering, 12″ × 8″, including soldering, bands, nails, etc., complete	0	12	0	1 l. ft.	233	8	0
610 „	Cast-iron 4″ square rain-water pipes, including jointing, saddle, bands, etc., complete	0	15	0	„	571	14	0
	Carried forward ...	...	...	...		71,401	2	1

Pumping Station, Design No. 2—(*concld.*)

Quantity.		Description of Works.	Rate.			Per	Amount.		
			Rs.	A.	P.		Rs.	A.	P.
		Brought forward ...	...	...	...		71,401	2	1
183	cwts.	Wrought-iron trusses, including cast-iron shoes, bolts and nuts, fixing, painting complete ...	22	0	0	1 cwt.	4,026	0	0
84	„	Angle iron purlins, cleats, including drilling holes, riveting, bolts and nuts, etc., fixing in position, complete	9	8	0	„	798	0	0
8,471	c. ft.	Rammed sand filling in basement, including watering, tamping, etc., complete	2	0	0	100 c. ft.	169	6	9
788	„	Gravel under verandah including watering, spreading, ramming, etc., complete	16	0	0	„	126	1	3
1,576	„	Blue granite jelly for road-making in verandah, including spreading, watering, ramming, etc., complete	16	0	0	„	252	2	7
127	„	Best Sholinghur granite stone, neatly dressed for girder templates, etc., fixing in cement complete ...	2	8	0	1 c. ft.	317	8	0
80	sq. ft.	Best Cuddapah slabs, 3″ thick, apron for rain water spouts fixing in cement, etc., complete ...	35	0	0	100 sq. ft.	28	0	0
255	lbs.	Copper tape, etc., for lightning conductor, etc.	1	2	0	1 lb.	286	14	0
18	No.	Bags of coke, etc.	1	4	0	1 No.	22	8	0
2	„	Testing the two lightning conductors and fixing with necessary things.	30	0	0	„	60	0	0
861	sq. ft.	Damp course in bitumen sheeting, including lappages, complete ...	0	8	0	1 sq. ft.	430	8	0
		Clearing site, hoarding, shoring, timbering, etc., complete, inclusive of labour and materials ...	...	...	...		6,000	0	0
							83,918	2	8
		Supervision and contingencies say, 15%	...	...	...		12,581	13	4
		Total carried to summary page ...	...	...	...		96,500	0	0

CIRCULAR CHIMNEY FOR PUMPING STATION, DESIGN No. 2.

Quantity.	Description of Works.	Rate. Rs.	A.	P.	Per	Amount. Rs.	A.	P.
12,600 c. ft.	Earthwork excavation, including dealing with water, timbering, ramming, refilling and removing surplus, etc., complete ...	1	8	0	100 c. ft.	183	0	0
5,040 "	Concrete in combination mortar in foundation	35	0	0	"	1,764	0	0
3,452 "	Brick in lime mortar in foundation ...	35	0	0	"	1,208	3	2
1,892 "	Circular brickwork in lime mortar from ground level to 13 feet high.	38	0	0	"	718	15	4
1,459 "	" " from 13 ft. to 20 ft.	42	0	0	"	612	12	5
2,205 "	" " " 20 " 46 "	46	0	0	"	1,014	4	9
1,848 "	" " " 46 " 72 "	50	0	0	"	924	0	0
1,516 "	" " " 72 " 98 "	55	0	0	"	833	12	9
1,204 "	" " " 98 " 124 "	60	0	0	"	722	6	5
283 "	" " " 124 " 132 "	66	0	0	"	186	12	5
1,527 "	" " " 132 " 150 "	72	0	0	"	1,099	7	0
307 "	Firebrick in fire clay circular chimney lining work complete ...	190	0	0	"	583	4	10
200 sq. ft.	Plastering in cement in base ...	7	0	0	100 sq. ft.	14	0	0
880 "	Plastering in lime mortar from ground level to 20 feet ...	4	0	0	"	35	0	2
1,048 "	" " from 20 ft. to 46 ft.	4	8	0	"	47	2	6
936 "	" " " 46 " 72 "	5	8	0	"	51	7	8
858 "	" " " 72 " 98 "	6	8	0	"	55	12	4
793 "	" " " 98 " 124 "	7	8	0	"	59	7	7
228 "	" " " 124 " 132 "	9	0	0	"	20	8	4
684 "	" " " 132 " 150 "	10	8	0	"	71	13	1
1 No.	Iron door complete	40	0	0	1 No.	40	0	0
1 "	Cast-iron cap for chimney ...	300	0	0	"	300	0	0
	Carried forward ...	...	...	...		10,546	2	9

Circular Chimney for Pumping Station, Design No. 2—(*concld.*)

Quantity.	Description of Works.	Rate.			Per	Amount.		
		Rs.	A.	P.		Rs.	A.	P.
	Brought forward ...	...	...	...		10,546	2	9
1 No.	Lightning conductor with copper band, wood blocks, nails, ornamental terminating tree to be 6′ from top of chimney, 3′ square copper earth plate, coke, etc., fixing and testing, complete ...	350	0	0	1 No.	350	0	0
						10,896	2	9
	Scaffolding charges at 5 %, say ...	...	...	...		603	13	3
						11,500	0	0
	Add unforeseen work and supervision, etc., at 15%, say ...	...	...	...		1,700	0	0
						13,200	0	0

ELEVATED TANK—(*see* Drawings Nos. 21, 22 and 23.)

Quantity.	Description of Works.	Rate.			Per	Amount.		
		Rs.	A.	P.		Rs.	A.	P.
	Earthwork and Masonry.							
115,500 c. ft.	Earthwork excavation, including dealing with water, timbering, refilling, ramming and removing surplus, etc.	1	0	0	100 c. ft.	1,155	0	0
46,000 „	Earth filling at basement, including ramming, watering, etc. ...	1	0	0	„	460	0	0
72,600 „	Concrete in combination mortar in foundation	35	0	0	„	25,410	0	0
35,200 „	Concrete in combination mortar in footings, including timbering ...	37	0	0	„	13,024	0	0
27,400 „	Concrete stone jelly in cement mortar round steel stanchions, including timbering and cement wash, etc., complete	60	0	0	„	16,440	0	0
40,600 „	Table moulded brickwork in combination mortar in piers, complete.	40	0	0	„	16,240	0	0
4,140 „	Sholinghur granite stone archwork, neatly dressed and fixing in cement, etc., as per drawing complete	3	8	0	1 c. ft.	14,490	0	0
1,870 „	Sholinghur granite stone mouldings in piers, neatly dressed and fixed in cement	4	0	0	„	7,480	0	0
2,200 „	holinghur granite stone eave mouldings at top of masonry, neatly dressed, fixing in cement with saddle joints as per drawing complete	4	8	0	„	9,900	0	0
400 „	Terrace bricks in lime-surki mortar for steps, etc., complete ...	30	0	0	100 c. ft.	120	0	0
4,800 sq. ft.	Cuddapah slabs, 2″ thick, for steps, fixed in cement mortar, etc., complete	25	0	0	100 sq. ft.	1,200	0	0
15,500 „	Colour washing, pointing in black and striking the surfaces of brickwork	4	0	0	„	620	0	0
52,800 „	Plastering in cement $\frac{3}{8}$″ thick, in ceiling, etc., including timbering complete	6	0	0	„	3,168	0	0
6,400 lbs.	Wrought-iron railings, including horizontal frames, hinges, bands, lewis bolts, etc., including fixing and painting 4 coats approved paint, complete, as per drawing...	0	5	0	1 lb.	2,000	0	0
	Carried forward...	...	...	...		1,11,707	0	0

Elevated Tank—(*contd.*)

Quantity.	Description of Works.	Rate.			Per	Amount.		
		Rs.	A.	P.		Rs.	A.	P.
	Brought forward ...	...	...	...		1,11,707	0	0
1 No.	Pair of wrought-iron gates, including hinges, bolts and nuts, locks and keys, painting the same, fixing with granite stone complete ...	150	0	0	1 No.	150	0	0
1 „	Tablet stone, polishing surface, inscribing letters, etc., and fixing in cement complete ...	100	0	0	„	100	0	0
						1,11,957	0	0
	Supervision and sundries at 15 °/o, say	...	...	...		16,843	0	0
	Total carried to summary page ...	...	...	...		1,28,800	0	0

Elevated Tank—(*concld.*)

Quantity.		Description of Works.	Rate. Rs.	A.	P.	Per	Amount. Rs.	A.	P.
		Steel-work in Foundations, Stanchions and Tank.							
49·5	tons	Steel-roof plates, main rafters, intermediate rafters, purlins, central support, ventilator, angle curb and rivets, etc., hoisting and fixing, complete for the roof of tank ...	360	0	0	1 ton	17,820	0	0
251·4	„	Steel side plates, floor plates, cover strips, brackets, angle rings, tie-rods, rivets, etc., hoisting and fixing complete for the tank ...	320	0	0	„	80,448	0	0
282·8	„	Steel-floor joists, stanchions, grillages, bolts and nuts, rivets, etc., fixing complete for sub-structure...	220	0	0	„	62,216	0	0
14·3	„	Steel bell-mouth, straight length in tank, taper below tank, straight lengths and bends, etc., hoisting and fixing complete for overflow and inlet pipes	340	0	0	„	4,862	0	0
	1 No.	Water level Indicator with eight-day clock and recording drum in polished wood case to record continuously depths of water from 0 to 30 feet on a 7-day diagram...	...	...	...	1 No.	450	0	0
		Expansion joint pipes for inlet and outlet and overflow pipes under bottom plate of the steel tank, bolts and nuts, etc., hoisting and fixing, etc., complete ...	...	...	...		900	0	0
		Total ...	...	...	...		1,66,696	0	0
		Add supervision and contingencies at 15 %, say	...	...	...		24,804	0	0
		Total carried to summary page ...	...	...	...		1,91,500	0	0

Note.—Prices for Tank steel work include painting with one coat at workshop, and after erection two coats of "Siderosthen" or other approved composition

CONNECTION OF THE NEW 48-INCH PUMPING MAIN WITH EXISTING AND PROPOSED DISTRIBUTION MAINS, NEAR THE SHAFT AT KILPAUK—(*see* Drawings Nos. 27, 28 and 29.)

Quantity.	Description of Works.	Rate.			Per	Amount.		
		Rs.	A.	P.		Rs.	A.	P.
1 No.	18″ Sluice valve with standard size socket and spigot tail-pieces for connecting the 18″ existing main along Madavakam Tank ...	144	0	0	each	144	0	0
1 „	Sluice valve flanged without tail-pieces on Main No. 7 ...	80	0	0	„	80	0	0
1 „	Socket and flanged cast-iron taper pipe 30″ to 18″ on Main No. 7 (up stream side 4′ 7½″ length) ...	115	0	0	„	115	0	0
1 „	Spigotted and flanged cast-iron taper pipe 30″ to 18″ on Main No. 7 (down stream side 8′ 9″ length)	207	14	0	„	207	14	0
2 „	24″ Sluice valves flanged without tail-pieces on Mains Nos. 1 & 3 ...	144	0	0	„	288	0	0
2 „	Socket and flanged cast-iron taper pipes 42″ × 24″ on Main No. 1 & 3 (up stream side 6′ 8½″ length) ...	504	7	5	„	1,008	14	10
2 „	Spigot and flanged cast-iron taper pipes 42″ to 36″ on Mains Nos. 1 & 3 down stream side 4′ 11″ length.	260	14	3	„	521	12	6
2 „	Flanged cast-iron taper pipes 36″ to 24″ down stream side 8′ length ...	289	11	8	„	579	7	4
2 „	18″ Cast-iron collars	16	11	2	„	33	6	4
1 „	18″ Cast-iron socket and spigot straight pipe	89	0	0	„	89	0	0
144 ft.	48″ Socket and spigot cast-iron straight pipe	37	7	9	ft.	5,397	12	0
144 „	30″ „ „ „ ...	16	5	4	„	2,352	0	0
1 No.	18″ × 18″ Socket and spigot tee branch	95	10	0	each	95	10	0
1 „	Cast-iron tee branch 48″ × 18″ special casting (70 cwts. 2 qrs. 3 lbs.) ...	705	2	10	„	705	2	10
1 „	Cast-iron tee branch 48″ × 42″ special casting	785	0	0	„	785	0	0
	Carried over ...	...	...	...	...	12,402	15	10

Connection of the new 48-inch Pumping Main with existing and proposed distribution Mains, near the shaft at Kilpauk—(*concld.*)

Quantity.	Description of Works.	Rate.			Per	Amount.		
		Rs.	A.	P.		Rs.	A.	P.
	Brought forward ...	...	...	...		12,402	15	10
1 No.	Cast-iron cross branch 48″ × 42″ special casting 8′ long (86 cwts. 0 qrs. 18 lbs.)	861	9	8	each	861	9	8
1 „	Socket and spigot cast-iron taper pipe 48″ to 30″ (6′ 1″ length) ...	416	12	6	„	416	12	6
2 „	42″ Cast-iron collar	64	13	0	„	129	10	0
2 „	48″ Cast-iron special 52° bends ...	762	8	0	„	1,525	0	0
1 „	48″ „ „ 33° „ ...	762	8	0	„	762	8	0
1 „	30″ „ „ 52° „ ...	251	4	0	„	251	4	0
2 „	18″ Cast-iron quarter bend ...	92	12	0	„	185	8	0
1 „	48″ „ special collar ...	70	0	0	„	70	0	0
	Total ...	...	...	...		16,605	4	0
	Jointing Materials and Labour.							
151 ft.	Earthwork, excavation for laying 48″ cast-iron pipes and specials ...	1	1	11	1. ft.	169	1	5
170 „	Excavation for laying 30″ cast-iron pipes and specials	0	10	11	„	115	15	10
151 „	Laying 48″ cast-iron pipes and specials	1	0	0	„	151	0	0
170 „	Laying 30″ cast-iron pipes and specials	0	9	6	„	100	15	0
151 „	Jointing 48″ cast-iron pipes and specials with lead joints ...	1	5	4	„	201	5	4
170 „	Jointing 30″ cast-iron pipes and specials with lead joints ...	0	12	0	„	127	8	0
3 No.	Cutting 42″ cast-iron pipes ...	10	8	0	each	31	8	0
2 „	„ 18″ „ „ ...	4	8	0	„	9	0	0
2 „	Conveying and fixing 24″ sluice valve with masonry chambers, etc., complete for the same ...	150	0	0	„	300	0	0
2 „	Conveying and fixing 18″ sluice valve with masonry chambers, etc., complete for the same ...	85	0	0	„	170	0	0
	Total ...	...	...	...		1,376	5	7

CONNECTION OF NEW 48-INCH PUMPING MAIN.

Summary of Costs from Detailed Estimate (Pages 232 and 233).

Quantity.	Description of Works.	Rate.			Per	Amount.		
		Rs.	A.	P.		Rs.	A.	P.
	48″ Cast-iron main and specials ...	...	...	...		16,605	4	0
	Excavation jointing with lead and labour, etc.	...	...	...		1,376	5	7
						17,981	9	7
	Add for contingencies and supervision, etc., 15 %	...	...	...		2,718	6	5
	Total Rs. ...	...	...	...		20,700	0	0

ESTIMATES.

C.

DETAILED ESTIMATES OF COST OF PIPE DISTRIBUTION SYSTEM FOR THE CITY OF MADRAS.

PAGES

Straight Socket and Spigot Cast-iron Pipes ... ... 238 and 239
Socket and Spigot Cast-iron Bends 241
Socket and Spigot Cast-iron Tee Branches for Mains ... ... 243 to 245
Socket and Spigot Cast-iron Tee Branches for Air Valves 245
Socket and Spigot Cast-iron Tee Branches for connecting new Pipes to existing Hydrants 246
Socket and Spigot Cast-iron Tee Branches for connecting new Pipes to existing Fountains 246
Socket and Spigot Cast-iron Taper Pipes where Mains are reduced in size ... 247
Socket and Spigot Cast-iron Taper Pipes for reducing Mains to Waste Detecting Meter Connections 248
Cast-iron Flanged Taper Pipes for reducing Mains to Sluice Valve Connections ... 249
Cast-iron Saddles for connecting existing Mains to new system 250
Cast-iron Collars for Mains, connection to Waste Detecting Meters, existing Hydrants and Fountains 251
Sluice Valves for Mains, for connection to new Hydrants and Washouts 252
Waste Water Detecting Meters 253
Double Air Valves with Screw-down Valves combined 253
Venturi Meters with combined Diagram and Counter Recorders 254
Hatch Boxes and Scour Pipe Connections to Venturi Meters 254
Surface Boxes for Sluice Valve Chambers 255
Wrought-iron Pipes and Fittings for connecting to existing house services ... 256
Excavation for laying Cast-iron Pipes 257
Laying Cast-iron Pipes 258
Jointing Cast-iron Pipes, Socket and Spigot Straight Pipes 259
Jointing Socket and Spigot Cast-iron Specials, Bends 260
Jointing Socket and Spigot Cast-iron Branches ... ... 261 and 262
Jointing Cast-iron Tapers 263
Jointing Cast-iron Collars 264
Cutting Mains and fixing Cast-iron Saddles for connecting existing Mains to new system. 265
Laying and jointing Wrought-iron Galvanized Pipes for connecting to existing house services 266
Tapping Mains and fixing Ferrules and Bends for connecting to existing house services. 266
Cleaning and coating old Pipes to be re-laid in the new system 267
Excavation for old Cast-iron Pipes to be re-laid in new system 267
Laying old Cast-iron Pipes to be used in new system 268
Jointing old Cast-iron Pipes to be re-laid in scheme 268
Disjointing old Pipes and removing 269
Summary of Cost of Pipes and Pipe-laying ... ... 270 and 271
Constructing Cast-iron Pillar Fountain including supplying and fixing of Pipes, Fitting, etc. 272
Constructing Double Tap Masonry Pillar Fountain ... ... 273 and 274
Constructing Single Tap Masonry Pillar Fountains ... ... 275 „ 276
Constructing a Double Tap Masonry Pillar Fountain at head of shallow sewers ... 277 „ 278
Constructing a washing place connected with flushing Latrine 279
Summary of Cost of Street Fountains 280

List of Estimates—(*contd.*)

DETAILED ESTIMATES OF COST OF PIPE DISTRIBUTION SYSTEM FOR THE CITY OF MADRAS—*continued.*

	PAGES
Constructing Chamber for 2½-inch Sluice Valve	281
Do. do. 3 do. do.	281
Do. do. 4 do. do.	282
Do. do. 5 do. do.	282
Do. do. 6 do. do.	283
Do. do. 7 do. do.	283
Do. do. 8 do. do.	284
Do. do. 9 do. do.	284
Do. do. 10 do. do.	285
Do. do. 12 do. do.	285
Do. do. 18 do. do.	286
Do. do. 24 do. do.	286
Summary of Cost of Sluice Valve Chambers	287
Constructing Chamber for 8-inch Waste Water Detecting Meter ...	288
Do. do. 6 do. do. do.	288
Do. do. 4 do. do. do.	288
Summary of Cost of Waste Water Detecting Meter Chambers ...	289
Constructing Chamber for 3-inch Air Valve	290
Do. do. 4 do. do.	290
Do. do. 6 do. do.	291
Summary of Cost of Air Valve Chambers	291
Venturi Meter Chamber and Recorder House on a 42-inch Main ...	292
Do. do. do. do. 36 do. ...	293
Do. do. do. do. 30 or 27-inch Main ...	294
Do. do. do. do. 22 or 18 do. ...	295
Summary of Cost of Venturi Meter Chambers	296
Sluice Valve Hydrant with Stand-post...	297
Washout into Side Drain	298
Special lengths on New Mains Nos. 1 and 7	299
Summary of Cost of Miscellaneous Work	300
General Abstract of Water Distribution Scheme	301

STRAIGHT SOCKET AND

(Drawing

Diameter of Pipes.	Thickness of Metal.	Length of each Pipe exclusive of Socket.	Total length of each size of Pipe.	Average weight per foot run including Sockets.	Total average weight of Pipes of different diameters.				Permitted Deviation.
inches.	inches.	feet.	feet.	lbs.	Tons	cwts.	qrs.	lbs.	per cent.
42	1¼	12	13,759	583	3,581	0	2	1	2
36	1⅛	12	6,110	450	1,227	9	0	12	2
33	1⅛	12	300	411·3	55	1	2	22	2
30	1	12	14,795	332·7	2,197	9	0	8	2
27	15/16	12	11,975	280	1,496	17	2	0	2
24	⅞	12	3,700	233·3	385	7	0	26	2
20	13/16	12	5,610	182	455	16	1	0	3
18	¾	12	9,495	151·1	640	9	3	2	3
16	11/16	12	3,755	123·5	207	0	2	6	3
14	11/16	12	3,160	110·4	155	14	3	12	3
12	⅝	12	12,750	86·7	493	9	3	13	3
10	9/16	12	8,300	63·5	235	5	3	6	3
9	9/16	9	5,270	59·3	139	10	1	3	3
8	½	9	3,265	46·9	68	7	0	24	3
7	½	9	18,060	41·3	332	19	2	14	4
6	½	9	11,808	34·8	183	8	3	18	4
5	7/16	9	26,370	24·9	293	2	2	13	4
4	⅜	9	5,40,910	18·7	4,515	12	2	17	4
			Unforeseen Extensions.						
4	⅜	9	10,000	18·7	83	9	2	16	4
					16,747	13	0	17	...

SPIGOT CAST-IRON PIPES.

No. 62.)

Weight of Deviation.				Total Average weight *plus* Deviation.				Rate per Ton.	Amount.		
Tons	cwts.	qrs.	lbs.	Tons	cwts.	qrs.	lbs.	Rs.	Rs.	A.	P.
71	12	1	18	3,652	12	3	19	110	4,01,791	0	11
24	10	3	26	1,252	0	0	10	110	1,37,720	7	10
1	2	0	4	56	3	2	26	110	6,180	8	5
43	18	3	26	2,241	8	0	6	110	2,46,554	4	9
29	18	3	0	1,526	16	1	0	110	1,67,949	6	0
7	14	0	16	393	1	1	14	110	43,237	9	0
13	13	1	27	469	9	2	27	110	51,643	9	3
19	4	1	5	659	14	0	7	110	72,567	5	6
6	4	0	24	213	4	3	2	110	23,456	3	7
4	13	1	22	160	8	1	6	110	17,645	10	9
14	16	0	11	508	5	3	24	110	55,912	12	10
7	1	0	20	242	6	3	26	110	26,658	6	5
4	3	2	23	143	13	3	26	110	15,806	14	5
2	1	0	2	70	8	0	26	110	7,745	4	5
13	6	1	15	346	6	0	1	110	38,093	0	9
7	6	3	1	190	15	2	19	110	20,986	2	11
11	14	2	1	304	17	0	14	110	33,534	3	0
180	12	2	1	4,696	5	0	18	110	5,16,588	6	2
Unforeseen Extensions.											
3	6	3	4	86	16	1	20	110	9,550	5	9
467	1	2	22	17,214	14	3	11	...			
				Total carried to summary page				Rs. ...	18,93,621	10	8

SOCKET AND SPIGOT CAST-IRON BENDS (*see* Drawing No. 62.)

Diameter of Pipes in inches.	Nature of Bends.	Number required.	Weight of each.			Total Weights.			Rate per cwt.	Amount.		
			cwts.	qrs.	lbs.	cwts.	qrs.	lbs.	Rs.	Rs.	A.	P.
42	1/4	1	54	0	0	54	0	0	10	540	0	0
42	1/8	5	54	0	0	270	0	0	10	2,700	0	0
36	1/4	2	36	3	21	73	3	14	10	738	12	0
33	1/4	1	30	2	4	30	2	4	10	305	5	9
30	1/8	2	25	0	14	50	1	0	10	502	8	0
30	1/16	3	25	0	14	75	1	14	10	753	12	0
27	1/8	5	19	3	27	99	3	23	10	999	8	10
27	1/16	1	19	3	27	19	3	27	10	199	14	7
24	1/16	2	15	2	24	31	1	20	10	314	4	7
18	1/4	2	9	0	19	18	1	10	10	183	6	3
18	1/8	2	9	0	19	18	1	10	10	183	6	3
18	1/16	1	9	0	19	9	0	19	10	91	11	2
16	1/4	1	7	2	17	7	2	17	10	76	8	3
16	1/8	1	7	2	17	7	2	17	10	76	8	3
14	1/8	2	6	0	19	12	1	10	10	123	6	3
12	1/4	1	4	3	16	4	3	16	10	48	14	10
12	1/8	2	4	3	16	9	3	4	10	97	13	9
10	1/8	2	3	1	25	6	3	22	10	69	7	5
9	1/4	1	3	0	14	3	0	14	10	31	4	0
9	1/8	4	3	0	14	12	2	0	10	125	0	0
8	1/8	4	2	1	3	9	0	12	10	91	1	2
7	1/4	10	2	0	16	21	1	20	10	214	4	7
7	1/8	5	2	0	16	10	2	24	10	107	2	3
7	1/16	2	2	0	16	4	1	4	10	42	13	9
6	1/4	7	1	3	1	12	1	7	10	123	2	0
6	1/8	2	1	3	1	3	2	2	10	35	2	10
6	1/16	1	1	3	1	1	3	1	10	17	9	5
5	1/4	9	1	0	24	10	3	20	10	109	4	7
5	1/8	6	1	0	24	7	1	4	10	72	13	9
4	1/4	638	0	3	11	541	6	18	10	5,411	9	9
4	1/8	54	0	3	11	45	3	6	10	458	0	7
4	1/16	7	0	3	11	5	3	21	10	59	4	0
						Total carried to summary page			Rs.	14,903	14	10

62

SOCKET AND SPIGOT CAST-IRON TEE BRANCHES FOR MAINS. (Drawing No. 62.)

Diameter of Pipes and Branches.	Number required.	Weight of each Casting.			Total Weight.			Rate per cwt.	Amount.		
inches.		cwts.	qrs.	lbs.	cwts.	qrs.	lbs.	Rs.	Rs.	A.	P.
42 × 18	1	64	1	8	64	1	8	10	643	3	5
36 × 14	2	36	1	3	72	2	6	10	725	8	7
36 × 12	3	35	3	9	107	1	27	10	1,074	14	7
36 × 9	3	35	0	27	105	2	25	10	1,057	3	9
36 × 4	9	33	2	4	301	3	8	10	3,018	3	5
36 × 3	3	33	1	24	100	1	16	10	1,003	14	10
33 × 4	3	29	0	13	87	1	11	10	873	7	9
30 × 18	2	26	3	15	53	3	2	10	537	10	10
30 × 14	1	25	3	20	25	3	20	10	259	4	7
30 × 12	2	25	2	2	51	0	4	10	510	5	9
30 × 4	6	23	2	16	141	3	12	10	1,418	9	2
27 × 10	1	18	3	11	18	3	11	10	188	7	9
27 × 4	3	17	2	6	52	2	18	10	526	9	9
24 × 7	1	15	2	9	15	2	9	10	155	12	10
24 × 4	1	15	0	5	15	0	5	10	150	7	2
20 × 7	1	11	1	24	11	1	24	10	114	10	3
20 × 5	1	10	3	11	10	3	11	10	108	7	9
18 × 12	1	8	3	14	8	3	14	10	88	12	0
18 × 7	2	8	0	19	16	1	10	10	163	6	3
18 × 6	1	8	0	2	8	0	2	10	80	2	10
18 × 5	1	7	3	18	7	3	18	10	79	1	9
18 × 4	7	7	3	5	54	2	7	10	545	10	0
18 × 3	1	7	2	23	7	2	23	10	77	0	10
16 × 14	1	7	3	9	7	3	9	10	78	4	10
16 × 12	4	7	1	26	29	3	20	10	299	4	7
16 × 10	1	7	0	19	7	0	19	10	71	11	2
16 × 7	1	6	3	7	6	3	7	10	68	2	0
16 × 6	2	6	2	20	13	1	12	10	133	9	2
Carried forward...									14,051	15	7

Socket and Spigot Cast-iron Tee Branches for Mains—*(contd.)*
(Drawing No. 62.)

Diameter of Pipes and Branches.	Number required.	Weight of each Casting.			Total Weight.			Rate per cwt.	Amount.		
inches.		cwts.	qrs.	lbs.	cwts.	qrs.	lbs.	Rs.	Rs.	A.	P.
Brought forward ...	...	...	...	...	...	...	...	...	14,051	15	7
16 × 5	1	6	2	8	6	2	8	10	65	11	5
16 × 4	32	6	1	24	206	3	12	10	2,068	9	2
14 × 9	1	5	2	13	5	2	13	10	56	2	7
14 × 5	2	5	1	0	10	2	0	10	105	0	0
12 × 7	1	4	1	27	4	1	27	10	44	14	7
12 × 6	1	4	1	12	4	1	12	10	43	9	2
12 × 4	4	4	0	16	16	2	8	10	165	11	5
10 × 7	1	3	2	14	3	2	14	10	36	4	0
10 × 6	1	3	1	27	3	1	27	10	34	14	7
10 × 4	11	3	1	2	35	3	22	10	359	7	5
9 × 4	5	3	0	0	15	0	0	10	150	0	0
8 × 7	1	2	3	4	2	3	4	10	27	13	9
8 × 5	1	2	2	4	2	2	4	10	25	5	9
8 × 4	2	2	1	20	4	3	12	10	48	9	2
7 × 7	4	2	2	9	10	1	8	10	103	3	5
7 × 6	1	2	1	22	2	1	22	10	24	7	5
7 × 4	69	2	0	24	152	3	4	10	1,527	13	9
7 × 3	6	2	0	12	12	2	16	10	126	6	10
6 × 6	3	2	0	23	6	2	13	10	66	2	7
6 × 5	1	2	0	10	2	0	10	10	20	14	3
6 × 4	44	1	3	24	86	1	20	10	864	4	7
6 × 3	6	1	3	14	11	1	0	10	112	8	0
5 × 5	5	1	2	11	7	3	27	10	79	14	7
5 × 4	70	1	1	26	103	3	0	10	1,037	8	0
5 × 3	9	1	1	15	12	1	23	10	124	8	10
4 × 4	851	1	0	20	1,002	3	24	10	10,029	10	3
4 × 3	39	1	0	9	42	0	15	10	421	5	5
Carried forward ...	...	...	...	...	...	...	...	...	31,822	12	6

Socket and Spigot Cast-iron Tee Branches for Mains—(*contd.*) (Drawing No. 62.)

Diameter of Pipes and Branches.	Number required.	Weight of each Casting.			Total Weight.			Rate per cwt.	Amount.		
inches.		cwts.	qrs.	lbs.	cwts.	qrs.	lbs.	Rs.	Rs.	A.	P.
Brought forward ...	...	...	...	...	...	...	...	...	31,822	12	6
4 × 7 special	1	3	1	5	3	1	5	10	32	15	2
4 × 6 „	2	2	3	1	5	2	2	10	55	2	10
4 × 5 „	1	2	1	21	2	1	21	10	24	6	0
3 × 5 „	1	2	0	7	2	0	7	10	20	10	0
3 × 4 „	78	1	2	8	122	2	8	10	1,225	11	5
				Total carried to summary page				Rs.	33,181	9	11

Unforeseen Extension.

4 × 4	50	0	3	8	41	0	8	10	410	11	5
				Total carried to summary page				Rs.	33,592	5	4

Socket and Spigot Cast-iron Tee Branches for Air Valves. (Drawing No. 40.)

42 × 6	2	38	2	3	77	0	6	10	770	8	0
36 × 6	1	29	0	0	29	0	0	10	290	0	0
27 × 4	3	15	0	0	45	0	0	10	450	0	0
24 × 4	1	13	2	0	13	2	0	10	135	0	0
14 × 3	1	4	1	14	4	1	14	10	43	12	0
12 × 3	1	3	0	19	3	0	19	10	31	11	2
				Total carried to summary page				Rs.	1,720	15	2

SOCKET AND SPIGOT CAST-IRON TEE BRANCHES FOR CONNECTING NEW PIPES TO EXISTING HYDRANTS.

(Drawing No. 58.)

Diameter of Pipes and Branches.	Number required.	Weight of each Casting.			Total Weight.			Rate per cwt.	Amount.		
inches.		cwts.	qrs.	lbs.	cwts.	qrs.	lbs.	Rs.	Rs.	A.	P.
20 × 2½	3	10	0	3	30	0	9	10	300	12	10
16 × 2½	12	6	0	9	72	3	24	10	729	10	3
14 × 2½	2	4	3	19	9	3	10	10	98	6	3
10 × 2½	1	3	0	6	3	0	6	10	30	8	7
9 × 2½	8	2	3	4	22	1	4	10	222	13	9
8 × 2½	1	2	0	24	2	0	24	10	22	2	3
7 × 2½	16	2	0	7	33	0	0	10	330	0	0
6 × 2½	23	1	3	11	42	2	1	10	425	1	5
5 × 2½	15	1	1	12	20	1	12	10	203	9	2
4 × 2½	107	1	0	8	114	2	16	10	1,146	6	10
				Total carried to summary page				Rs.	3,509	7	4

SOCKET AND SPIGOT CAST-IRON TEE BRANCHES FOR CONNECTING NEW PIPES TO EXISTING FOUNTAINS.

Diameter of Pipes and Branches.	Number required.	Weight of each Casting.			Total Weight.			Rate per cwt.	Amount.		
inches.		cwts.	qrs.	lbs.	cwts.	qrs.	lbs.	Rs.	Rs.	A.	P.
16 × 2	8	6	0	15	49	0	8	10	490	11	5
14 × 2	1	4	3	11	4	3	11	10	48	7	9
10 × 2	2	3	0	2	6	0	4	10	60	5	9
9 × 2	4	2	2	26	10	3	20	10	109	4	7
8 × 2	3	2	0	17	6	1	23	10	64	8	10
7 × 2	15	2	0	1	30	0	15	10	301	5	5
6 × 2	32	1	3	3	56	3	12	10	568	9	2
5 × 2	22	1	1	8	29	0	8	10	290	11	5
4 × 2	556	1	0	1	560	3	24	10	5,609	10	3
				Total carried to summary page				Rs.	7,543	10	7

SOCKET AND SPIGOT CAST-IRON TAPER PIPES WHERE MAINS ARE REDUCED IN SIZE. (Drawing No. 62.)

DIAMETER OF TAPERS.		Number required.	Weight of each Casting.			Total Weight.			Rate per cwt.	Amount.		
D, Socket end	D_1 Spigot end											
inches.	inches.		cwts.	qrs.	lbs.	cwts.	qrs.	lbs.	Rs.	Rs.	A.	P.
42	36	1	34	1	3	34	1	3	10	342	12	3
36	33	1	29	3	6	29	3	6	10	298	0	7
33	30	1	21	0	7	21	0	7	10	210	10	0
30	27	1	19	2	26	19	2	26	10	197	5	2
30	20	1	15	2	19	15	2	19	10	156	11	2
27	24	1	13	3	4	13	3	4	10	137	13	9
24	20	1	11	1	0	11	1	0	10	112	8	0
20	18	2	8	1	5	16	2	10	10	165	14	3
18	16	1	6	3	24	6	3	24	10	69	10	3
18	14	1	6	2	18	6	2	18	10	66	9	9
18	12	1	6	1	8	6	1	8	10	63	3	5
16	14	1	5	1	0	5	1	0	10	52	8	0
16	12	2	4	3	27	9	3	26	10	99	13	2
14	12	1	4	1	20	4	1	20	10	44	4	7
14	10	1	4	0	13	4	0	13	10	41	2	7
12	10	5	3	1	27	17	1	23	10	174	8	10
10	9	1	2	3	2	2	3	2	10	27	10	10
10	8	1	2	2	14	2	2	14	10	26	4	0
10	7	3	2	2	7	7	2	21	10	76	14	0
9	8	1	2	1	19	2	1	19	10	24	3	2
9	7	2	2	1	13	4	2	26	10	47	5	2
8	7	1	2	0	5	2	0	5	10	20	7	2
8	6	1	1	3	25	1	3	25	10	19	11	9
8	4	1	1	2	20	1	2	20	10	16	12	7
7	6	7	1	3	10	12	3	14	10	128	12	0
7	5	1	1	2	19	1	2	19	10	16	11	2
7	4	20	1	2	1	30	0	20	10	301	12	7
6	5	6	1	1	24	8	3	4	10	87	13	9
6	4	16	1	1	10	21	1	20	10	214	4	7
5	4	7	1	0	12	7	3	0	10	77	8	0
5	3	1	1	0	4	1	0	4	10	10	5	9
4	3	42	0	2	8	24	0	0	10	240	0	0
						Total carried to summary page			Rs.	3,570	0	3

SOCKET AND SPIGOT CAST-IRON TAPER PIPES FOR REDUCING MAINS TO WASTE DETECTING METER CONNECTIONS.

(**Drawing No. 63.**)

Diameter of Tapers. D Socket end	Diameter of Tapers. D_1 Spigot end	Number required.	Weight of each.			Total Weight.			Rate per cwt.	Amount.		
inches.	inches.		cwts.	qrs.	lbs.	cwts.	qrs.	lbs.	Rs.	Rs.	A.	P.
12	8	2	3	0	18	6	1	8	10	63	3	5
12	6	4	3	0	8	12	1	4	10	122	13	9
10	8	6	2	2	14	15	3	0	10	157	8	0
10	6	8	2	2	0	20	0	0	10	200	0	0
10	4	2	2	1	12	4	2	24	10	47	2	3
9	8	2	2	1	19	4	3	10	10	48	6	3
9	6	10	2	1	7	23	0	14	10	231	4	0
9	4	2	2	0	0	4	0	0	10	40	0	0
8	6	6	1	3	25	11	3	10	10	118	6	3
8	4	4	1	2	20	6	2	24	10	67	2	3
7	6	48	1	3	10	88	1	4	10	882	13	9
7	4	22	1	2	1	33	0	22	10	331	15	5
6	5	10	1	1	24	14	2	16	10	146	6	10
6	4	12	1	1	10	16	0	8	10	160	11	5
5	4	6	1	0	12	6	2	16	10	66	6	10
4	3	2	0	2	8	1	0	16	10	11	6	10
								Total carried to summary page	Rs.	2,695	11	3

CAST-IRON FLANGED TAPER PIPES FOR REDUCING MAINS TO SLUICE VALVE CONNECTIONS.

(Drawings Nos. 49, 50 & 55.)

Diameter of Flanged Tapers.		Number required.	Weight of each Casting.			Total Weight.			Rate per cwt.	Amount.			—
Main end.	Valve end.												
inches.	inches.		cwts.	qrs.	lbs.	cwts.	qrs.	lbs.	Rs.	Rs.	A.	P.	
42	24	2	50	1	22	100	3	16	10	1,008	14	10	Short Taper.
42	36	2	26	0	20	52	1	12	10	523	9	2	Long Taper.
36	24	2	28	3	25	57	3	22	10	579	7	5	Long Taper.
36	24	2	15	2	27	31	1	26	10	314	13	2	Short Taper.
36	24	2	28	1	3	56	2	6	10	565	8	7	Long Taper.
33	18	1	15	1	11	15	1	11	10	153	7	9	Short Taper.
33	18	1	25	2	6	25	2	6	10	255	8	7	Long Taper.
30	18	2	11	2	0	23	0	0	10	230	0	0	Short Taper.
30	18	2	20	3	7	41	2	14	10	416	4	0	Long Taper.
27	18	1	8	2	8	8	2	8	10	85	11	5	Short Taper.
27	18	1	18	2	26	18	2	26	10	187	5	2	Long Taper.
20	12	2	4	1	10	8	2	20	10	86	12	7	Short Taper.
20	12	2	7	2	6	15	0	12	10	151	1	2	Long Taper.
18	12	6	3	0	25	19	1	10	10	193	6	3	Short Taper.
18	12	6	5	1	18	32	1	24	10	324	10	3	Long Taper.
16	12	3	2	1	14	7	0	14	10	71	4	0	Short Taper.
16	12	3	4	0	3	12	0	9	10	120	12	10	Long Taper.
14	12	2	1	2	22	3	1	16	10	33	14	10	Short Taper.
14	12	2	2	2	3	5	0	6	10	50	8	7	Long Taper.
		Total carried to summary page							Rs.	5,353	0	7	

CAST-IRON SADDLES FOR CONNECTING EXISTING MAINS TO NEW SYSTEM. (Drawing No. 62.)

Diameter. Main.	Diameter. Junction.	Number required.	Rate. Rs.	A.	P.	Per	Amount. Rs.	A.	P.
inches.	inches.		Rs.	A.	P.		Rs.	A.	P.
42	4	12	26	0	0	each	312	0	0
36	4	1	25	4	0	,,	25	4	0
30	4	1	24	8	0	,,	24	8	0
27	7	2	37	9	0	,,	75	2	0
27	4	32	24	5	0	,,	778	0	0
24	4	6	24	2	0	,,	144	12	0
22	4	5	23	12	0	,,	118	12	0
21	4	1	23	11	0	,,	23	11	0
20	4	3	23	10	2	,,	70	14	6
18	7	1	36	10	0	,,	36	10	0
18	4	10	23	6	0	,,	233	12	0
16	4	2	23	6	0	,,	46	12	0
14	6	1	31	12	0	,,	31	12	0
14	5	1	27	8	0	,,	27	8	0
14	4	36	23	0	0	,,	828	0	0
12	7	1	36	1	0	,,	36	1	0
12	5	1	27	5	0	,,	27	5	0
12	4	41	22	13	0	,,	935	5	0
10	5	2	27	2	0	,,	54	4	0
10	4	35	22	10	0	,,	791	14	0
9	7	1	35	4	0	,,	35	4	0
9	4	21	22	0	0	,,	462	0	0
8	8	1	39	13	0	,,	39	13	0
8	4	13	21	15	0	,,	285	3	0
7	7	1	35	2	0	,,	35	2	0
7	4	129	21	14	0	,,	2,821	14	0
6	6	2	30	9	6	,,	61	3	0
6	5	1	26	5	6	,,	2	5	9
6	4	66	21	13	6	,,	1,441	11	0
6	3	1	17	13	6	,,	17	13	6
5	4	1	21	12	6	,,	21	12	6
						Total carried to summary page Rs.	9,870	4	0

CAST-IRON COLLARS. (Drawing No. 62.)

Collars to suit Pipes of the undermentioned internal diameters.	Number required.	Weight of each.			Total Weight.			Rate per cwt.	Amount.			Total.		
Cast-iron Collars for Mains.														
inches.		cwts.	qrs.	lbs.	cwts	qrs.	lbs.	Rs.	Rs.	A.	P.	Rs.	A.	P.
12	1	0	3	19	0	3	19	10	9	3	2			
9	2	0	2	0	1	0	0	10	10	0	0			
8	1	0	1	27	0	1	27	10	4	14	7			
7	11	0	1	17	4	1	19	10	44	3	2			
6	7	0	1	6	2	0	14	10	21	4	0			
5	24	0	1	2	6	1	20	10	64	5	5			
4	152	0	0	26	35	3	24	10	359	10	3			
3	83	0	0	22	16	1	6	10	163	0	7			
												676	9	2
Cast-iron Collars for Connections to Waste-water Detecting Meters.														
8	5	0	1	27	2	1	23	10	24	8	10			
6	38	0	1	6	11	2	4	10	115	5	9			
5	5	0	1	2	1	1	10	10	13	6	3			
4	24	0	0	26	5	2	8	10	55	11	5			
3	1	0	0	22	0	0	22	10	1	15	5			
												210	15	8
Cast-iron Collars for Connections to existing Hydrants.														
2½	188	0	0	17	28	2	10	10	..	...	...	285	5	9
Cast-iron Collars for Connections to existing Fountains.														
2	643	0	0	11	63	0	17	10	...	...	...	631	8	3
								Total carried to summary page			Rs.	1,804	6	10

SLUICE VALVES FITTED WITH FOUR GUN-METAL FACES, TWO ON BODY AND TWO ON VALVE DOOR WITH GUN-METAL SCREWED SPINDLE AND GUN-METAL NUT.

(**Drawing No. 62.**)

Remarks.	Diameter of Valves.	Number required.	Rate.	Amount.			Total.		
Sluice Valves for Mains.									
	inches.		Rs.	Rs.	A.	P.			
Without Tail-pieces ...	24	4	460	1,840	0	0			
„ ...	18	3	280	840	0	0			
„ ...	12	13	120	1,560	0	0			
With Tail-pieces ...	12	4	150	600	0	0			
„ ...	10	3	120	360	0	0			
„ ...	9	2	100	200	0	0			
„ ...	8	3	90	270	0	0			
„ ...	7	33	70	2,310	0	0			
„ ...	6	22	60	1,320	0	0			
„ ...	5	28	50	1,400	0	0			
„ ...	4	1,257	40	50,280	0	0			
„ ...	3	29	30	870	0	0			
Unforeseen Extension.									
With Tail-pieces ...	4	50	56	2,800	0	0	64,650	0	0
Sluice Valve for Connections to new Hydrants.									
With Tail-pieces ...	2½	600	25	...	...	...	15,000	0	0
Sluice Valves for Connections to Wash-outs.									
With Tail-pieces ...	4	300	40	...	...	...	12,000	0	0
Total carried to summary page Rs.							91,650	0	0

WASTE-WATER DETECTING METERS. (Drawing No. 63.)

Size of Meter.	Number required.	Rate of each.			Amount.		
		Rs.	A.	P.	Rs.	A.	P.
8	6	880	0	0	5,280	0	0
6	58	620	0	0	35,960	0	0
4	56	490	0	0	27,440	0	0
Total carried to summary page				Rs.	68,680	0	0

Note.—Rate includes Vertical Type Recorder, Meter, supply of weekly diagram papers for two years, Freight, Landing, etc., but not fixing.

DOUBLE AIR VALVES WITH SCREW-DOWN VALVE COMBINED TO ALLOW OF AIR VALVES BEING REPAIRED WITHOUT SHUTTING WATER OFF MAIN.

(Drawings Nos. 54 & 55.)

Diameter of Main on which the Valve is to be fixed.	Size of Air Valve.	Number.	Rate of each.			Amount.		
inches.	inches.		Rs.	A.	P.	Rs.	A.	P.
42	6	2	120	0	0	240	0	0
36	6	1	120	0	0	120	0	0
27	4	3	70	0	0	210	0	0
24	4	1	70	0	0	70	0	0
14	3	1	45	0	0	45	0	0
12	3	1	45	0	0	45	0	0
Total carried to summary page					Rs.	730	0	0

VENTURI METERS WITH COMBINED DIAGRAM AND COUNTER RECORDERS AT THE HEAD OF DISTRIBUTION MAINS. (Drawing No. 24.)

Diameter of Main.	Number.	Rate of each Meter and Recorder.			Amount.		
		Rs.	A.	P.	Rs.	A.	P.
inches.							
42	1	9,500	0	0	9,500	0	0
36	1	9,100	0	0	9,100	0	0
30	1	6,300	0	0	6,300	0	0
27	1	6,300	0	0	6,300	0	0
22	1	5,700	0	0	5,700	0	0
18	1	5,700	0	0	5,700	0	0
14	1	5,700	0	0	5,700	0	0
Total carried to summary page				Rs.	48,300	0	0

Note.—Rate includes Venturi tube, Recording instrument, and supply of weekly diagram papers for two years, but not fixing.

HATCH BOXES AND SCOUR PIPE CONNECTIONS TO VENTURI METERS AT THE HEAD OF DISTRIBUTION MAINS. (Drawing No. 24.)

Diameter of Main.	Number required.	Rate of each.			Amount.		
		Rs.	A.	P.	Rs.	A.	P.
inches.							
42	1	1,000	0	0	1,000	0	0
36	1	700	0	0	700	0	0
30	1	550	0	0	550	0	0
27	1	550	0	0	550	0	0
22	1	400	0	0	400	0	0
18	1	400	0	0	400	0	0
14	1	400	0	0	400	0	0
Total carried to summary page				Rs.	4,000	0	0

SURFACE BOXES FOR SLUICE VALVE CHAMBERS.

(Drawing No. 62.)

Surface Boxes on Chambers to suit Sluice Valves of the undermentioned diameters.	Number required.	Size of Surface Boxes. Length.	Breadth.	Depth.	Rate per Box.			Amount.			Total.		
Surface Boxes for Sluice Valves on Mains.													
inches.		inches.	inches.	inches.	Rs.	A.	P.	Rs.	A.	P.	Rs.	A.	P.
24	4	18	12	10	9	8	0	38	0	0			
18	6	15	12	10	8	8	0	51	0	0			
12	17	12	12	10	7	8	0	127	8	0			
10	3	12	12	10	7	8	0	22	8	0			
9	2	12	12	10	7	8	0	15	0	0			
8	3	9	9	10	5	8	0	16	8	0			
7	33	9	9	10	5	8	0	181	8	0			
6	22	9	9	10	5	8	0	121	0	0			
5	82	9	9	10	5	8	0	154	0	0			
4	1,257	9	9	10	5	8	0	6,913	8	0			
3	29	6	6	10	2	8	0	72	8	0			
Unforeseen Extensions.													
4	50	9	9	10	8	5	0	275	0	0			
											7,988	0	0
Surface Boxes for Sluice Valves on Hydrant.													
0	600	6	6	10	2	8	0	...	...	...	1,500	0	0
											...	...	...
Surface Boxes for Sluice Valves on Wash-out Connections.													
0	300	9	9	10	5	8	0	...	...	...	1,650	0	0
				Total carried to summary page						Rs.	11,138	0	0

WROUGHT-IRON PIPES AND FITTINGS FOR CONNECTING TO EXISTING HOUSE SERVICES.

Description.	Diameter of Pipes.	Number required.	Length.	Rate per foot run.			Amount.			Total.		
	inches.		feet.	Rs.	A.	P.	Rs.	A.	P.	Rs.	A.	P.
Wrought-iron galvanized Pipes ...	1½	...	85	0	5	6	29	3	6			
	1¼	...	2,140	0	4	6	601	14	0			
	1	...	19,260	0	3	3	3,912	3	0			
										4,543	4	6
Ferrules, Wrought-iron, galvanized ...	1½	17	...	5	0	0	85	0	0			
	1¼	428	...	5	0	0	2,140	0	0			
	1	3,852	...	5	0	0	19,260	0	0			
										21,485	0	0
Wrought-iron Quarter Bends, galvanized.	1½	17	...	0	10	0	10	10	0			
	1¼	428	...	0	8	0	214	0	0			
	1	3,852	...	0	5	0	1,203	12	0			
										1,428	6	0
Wrought-iron Couplings, galvanized...	1½	17	...	0	2	6	2	10	6			
	1¼	428	...	0	2	3	60	3	0			
	1	3,852	...	0	1	9	421	5	0			
										484	2	6
Reducing Couplings, galvanized ...	2½ × 2	9	...	1	0	0	9	0	0	9	0	0
Total carried to summary page Rs.										27,949	13	0

EXCAVATION FOR LAYING CAST-IRON PIPES FOR MAINS CONNECTIONS TO HYDRANTS AND FOUNTAINS AND HOUSE CONNECTIONS.

Note.—The rate includes excavation, timbering, dealing with water, refilling, ramming, lighting, watching, removing surplus excavation, and restoration of road surface.

—	Diameter of Pipes.	Length.	Average Excavation. Breadth.	Average Excavation. Depth.	Total Cubic Feet of excavation.	Total Amount @ Rs. 2 per 100 Cubic Feet. Rs.	A.	P.
	inches.	feet.	feet.	feet.				
Mains ...	42	13,759	6	8	660,432	13,208	10	3
	36	6,110	5½	7½	252,038	5,040	12	2
	33	300	5	7	10,500	210	0	0
	30	14,795	5	6¾	499,331	9,986	9	11
	27	11,975	4½	6½	350,269	7,005	6	1
	24	3,700	4½	6¼	104,063	2,081	4	2
	20	5,610	4	5¾	129,030	2,580	9	7
	18	9,495	4	5¾	218,385	4,367	11	2
	16	3,755	3¾	5½	77,447	1,548	15	0
	14	3,160	3¾	5¼	62,213	1,244	4	2
	12	12,750	3¾	5¼	251,016	5,020	5	2
	10	8,300	3½	5	145,250	2,905	0	0
	9	5,270	3½	5	92,225	1,844	8	0
	8	3,265	3½	4¾	54,281	1,085	9	11
	7	18,060	3½	4¾	300,248	6,004	15	4
	6	11,808	3½	4¾	196,308	3,926	2	7
	5	26,370	3	4½	355,995	7,119	14	5
	4	540,910	3	4½	7,302,285	1,46,045	11	2
Unforeseen Extensions.								
	4	10,000	3	4½	135,000	2,700	0	0
				Total...	11,196,316	2,23,926	5	1
Hydrant Connections ...	2½	1,128	2½	3	8,460	169	3	2
Fountain Connections ...	2	3,215	2	2	12,860	257	3	2
House Connections ...	1 to 2	21,530	2	2	86,120	1,722	6	5
Total carried to summary page				Rs.	11,303,756	2,26,075	1	10

LAYING CAST-IRON PIPES.

Note.—Rate includes conveying Pipe to site, lowering into trench and placing in position. It does not include jointing or excavation.

Diameter of Pipes.	Length of Pipes.	Rate per Lineal Foot.			Amount.		
inches.	feet.	Rs.	A.	P.	Rs.	A.	P.
42	13,759	0	12	0	10,319	4	0
36	6,110	0	10	0	3,818	12	0
33	300	0	9	9	182	13	0
30	14,795	0	9	6	8,784	8	6
27	11,975	0	9	0	6,735	15	0
24	3,700	0	7	0	1,618	12	0
20	5,610	0	5	6	1,928	7	0
18	9,495	0	5	0	467	3	0
16	3,755	0	4	6	1,056	1	6
14	3,160	0	3	6	693	7	0
12	12,750	0	3	0	2,390	10	0
10	8,300	0	2	9	1,426	9	0
9	5,270	0	2	6	823	7	0
8	3,265	0	2	3	459	2	3
7	18,060	0	2	0	2,257	8	0
6	11,808	0	1	9	1,291	8	0
5	26,370	0	1	6	2,472	3	0
4	540,910	0	1	3	42,258	9	6
Unforeseen Extensions.							
4	10,000	0	1	3	781	4	0
	Total carried to summary page			Rs.	89,765	15	9

JOINTING CAST-IRON PIPES—SOCKETS AND SPIGOTS.

Straight Pipes.

Note.—Rate includes lead, yarn and labour, but is exclusive of laying.

Diameter.	Total length.	Length of each Pipe.	Number of Joints.	Rate per Joint.			Amount.		
				Rs.	A.	P.	Rs.	A.	P.
inches.	feet.	feet.							
42	13,759	12	1,147	12	0	0	13,764	0	0
36	6,110	12	509	10	0	0	5,090	0	0
33	300	12	25	9	8	0	237	8	0
30	14,795	12	1,233	9	0	0	11,097	0	0
27	11,975	12	998	9	0	0	8,982	0	0
24	3,700	12	308	7	0	0	2,156	0	0
20	5,610	12	467	5	8	0	2,568	8	0
18	9,495	12	791	5	0	0	3,955	0	0
16	3,755	12	313	4	8	0	1,408	8	0
14	3,160	12	263	3	8	0	920	8	0
12	12,750	12	1,062	3	0	0	3,186	0	0
10	8,300	12	692	2	8	0	1,730	0	0
9	5,270	9	586	2	4	0	1,318	8	0
8	3,265	9	363	2	0	0	726	0	0
7	18,060	9	2,007	1	12	0	3,512	4	0
6	11,808	9	1,312	1	8	0	1,968	0	0
5	26,370	9	2,930	1	4	0	3,662	8	0
4	540,910	9	6,019	1	0	0	60,011	0	0

Unforeseen Extensions.

4	10,000	9	1,111	1	0	0	1,111	0	0
			Total carried to summary page			Rs.	1,27,494	4	0

JOINTING SOCKET AND SPIGOT CAST-IRON SPECIALS.

Bends.

Note.—Rate includes lead, yarn and labour, but is exclusive of laying.

Diameter.	Number of Joints.	Rate per Joint.			Amount.		
inches.		Rs.	A.	P.	Rs.	A.	P.
42	6	12	0	0	72	0	0
36	2	10	0	0	20	0	0
33	1	9	8	0	9	8	0
30	5	9	0	0	45	0	0
27	6	9	0	0	54	0	0
24	2	7	0	0	14	0	0
18	5	5	0	0	25	0	0
16	2	4	8	0	9	0	0
14	2	3	8	0	7	0	0
12	3	3	0	0	9	0	0
10	2	2	8	0	5	0	0
9	5	2	4	0	11	4	0
8	4	2	0	0	8	0	0
7	17	1	12	0	29	12	0
6	10	1	8	0	15	0	0
5	15	1	4	0	18	12	0
4	699	1	0	0	699	0	0
Total carried to summary page				Rs.	1,051	4	0

Jointing Socket and Spigot Cast-iron Specials—(*contd.*)

Branches.

Note.—Rate includes lead, yarn and labour, but is exclusive of laying.

Diameter of Pipes.	Number of Joints.	Rate per Joint.			Amount.			Total.		
					Branches on Mains.					
inches.		Rs.	A.	P.	Rs.	A.	P.	Rs.	A.	P.
42	1	12	0	0	12	0	0			
36	17	10	0	0	170	0	0			
33	3	9	8	0	28	8	0			
30	3	9	0	0	27	0	0			
27	7	9	0	0	63	0	0			
24	2	7	0	0	14	0	0			
20	1	5	8	0	5	8	0			
18	23	5	0	0	115	0	0			
16	44	4	8	0	198	0	0			
14	3	3	8	0	10	8	0			
12	5	3	0	0	15	0	0			
10	13	2	8	0	32	8	0			
9	5	2	4	0	11	4	0			
8	4	2	0	0	8	0	0			
7	84	1	12	0	147	0	0			
6	55	1	8	0	82	8	0			
5	86	1	4	0	107	8	0			
4	878	1	0	0	878	0	0			
3	63	0	12	0	47	4	0	1,972	8	0
					Unforeseen Extensions.					
4	50	1	0	0	...	...	...	50	0	0
					Branches on Mains for Connection to Air Valves.					
42	2	12	0	0	24	0	0			
36	1	10	0	0	10	0	0			
27	3	9	0	0	27	0	0			
24	1	7	0	0	7	0	0			
14	1	3	8	0	3	8	0			
12	1	3	0	0	3	0	0	74	8	0
		Total carried to summary page					Rs.	2,097	0	0

Jointing Socket and Spigot Cast-iron Specials—(*contd.*)

Branches—(*contd.*)

Note.—Rate includes lead, yarn and labour, but is exclusive of laying.

Diameter of Pipes.	Number of Joints.	Rate per Joint.			Amount.			Total.		
Branches on Fountain Connections.										
inches.		Rs.	A.	P.	Rs.	A.	P.	Rs.	A.	P.
					Brought forward ...			2,097	0	0
20	3	5	8	0	16	8	0			
16	8	4	8	0	36	0	0			
14	1	3	8	0	3	8	0			
10	2	2	8	0	5	0	0			
9	4	2	4	0	9	0	0			
8	3	2	0	0	6	0	0			
7	15	1	12	0	26	4	0			
6	32	1	8	0	48	0	0			
5	22	1	4	0	27	8	0			
4	556	1	0	0	556	0	0	733	12	0
Branches on Hydrant Connections.										
16	8	4	8	0	36	0	0			
14	2	3	8	0	7	0	0			
10	1	2	8	0	2	8	0			
9	8	2	4	0	18	0	0			
8	1	2	0	0	2	0	0			
7	16	1	12	0	28	0	0			
6	23	1	8	0	34	8	0			
5	15	1	4	0	18	12	0			
4	107	1	0	0	107	0	0			
								253	12	0
					Total carried to summary page		Rs.	3,084	8	0

JOINTING CAST-IRON SPECIALS.

Tapers.

Note.—Rate includes lead, yarn and labour, but is exclusive of laying.

Description.	Diameter.	Number of Joints.	Rate.			Amount.		
	inches.		Rs.	A.	P.	Rs.	A.	P.
Tapers for Mains ...	42	1	12	0	0	12	0	0
	36	1	10	0	0	10	0	0
	30	1	9	0	0	9	0	0
	27	2	9	0	0	18	0	0
	24	2	7	0	0	14	0	0
	18	5	5	0	0	25	0	0
	16	3	4	8	0	13	8	0
	14	2	3	8	0	7	0	0
	12	5	3	0	0	15	0	0
	10	5	2	8	0	12	8	0
	9	3	2	4	0	6	12	0
	8	3	2	0	0	6	0	0
	7	28	1	12	0	49	0	0
	6	22	1	8	0	33	0	0
	5	8	1	4	0	10	0	0
	4	42	1	0	0	42	0	0
Tapers for reducing Mains to Waste Detecting Meters.	12	6	3	0	0	18	0	0
	10	16	2	8	0	40	0	0
	9	14	2	4	0	31	8	0
	8	10	2	0	0	20	0	0
	7	70	1	12	0	122	8	0
	6	22	1	8	0	33	0	0
	5	6	1	4	0	7	8	0
	4	2	1	0	0	2	0	0
Total carried to summary page					Rs.	557	4	0

JOINTING CAST-IRON SPECIALS.

Collars.

Note.—Rate includes lead, yarn and labour, but is exclusive of laying.

Diameter of Pipes.	Number of Joints.	Rate per Joint. Rs.	A.	P.	Amount. Rs.	A.	P.	Total Amount. Rs.	A.	P.
Collars on Mains.										
inches.										
12	2	3	0	0	6	0	0			
9	4	2	4	0	9	0	0			
8	2	2	0	0	4	0	0			
7	24	1	12	0	42	0	0			
6	16	1	8	0	24	0	0			
5	62	1	4	0	77	8	0			
4	410	1	0	0	410	0	0			
3	204	0	12	0	153	0	0			
	Joints for extra Collars				362	12	0			
								1,088	4	0
Collars for Connections to Waste Detecting Meters.										
8	10	2	0	0	20	0	0			
6	76	1	8	0	114	0	0			
5	10	1	4	0	12	8	0			
4	48	1	0	0	48	0	0			
3	2	0	12	0	1	8	0			
								196	0	0
Collars on Hydrant Connections.										
2½	376	0	10	0	235	0	0			
	Joints for extra Collars				117	8	0			
								352	8	0
Collars for Fountain Connections.										
2	1,286	0	8	0	643	0	0			
	Joints for extra Collars				321	8	0			
								964	8	0
	Total carried to summary page						Rs.	2,601	4	0

CUTTING MAINS AND FIXING CAST-IRON SADDLES TO CONNECT EXISTING DISTRIBUTARIES WITH NEW MAINS.

Diameter of Pipes and Junction.	Number required.	Rate of each.			Amount.		
		Rs.	A.	P.	Rs.	A.	P.
inches.							
42 × 4	12	10	8	0	126	0	0
36 × 4	1	9	0	0	9	0	0
30 × 4	1	7	8	0	7	8	0
27 × 7	2	7	8	0	15	0	0
27 × 4	32	6	12	0	216	0	0
24 × 4	6	6	0	0	36	0	0
22 × 4	5	5	8	0	27	8	0
21 × 4	1	5	8	0	5	8	0
20 × 4	3	5	0	0	15	0	0
18 × 7	1	4	8	0	4	8	0
18 × 4	15	4	8	0	67	8	0
16 × 4	6	4	0	0	24	0	0
14 × 6	1	3	8	0	3	8	0
14 × 5	2	3	8	0	7	0	0
14 × 4	36	3	8	0	126	0	0
12 × 7	1	3	0	0	3	0	0
12 × 5	1	3	0	0	3	0	0
12 × 4	41	3	0	0	123	0	0
10 × 5	2	2	8	0	5	0	0
10 × 4	35	2	8	0	87	8	0
9 × 7	1	2	8	0	2	8	0
9 × 4	21	2	4	0	47	4	0
8 × 8	1	3	0	0	3	0	0
8 × 4	13	2	0	0	26	0	0
7 × 7	1	2	8	0	2	8	0
7 × 4	129	1	12	0	225	12	0
6 × 6	2	3	0	0	6	0	0
6 × 5	1	1	12	0	1	12	0
6 × 4	66	1	8	0	99	0	0
6 × 3	1	1	8	0	1	8	0
5 × 4	1	1	4	0	1	4	0
Total carried to summary page				Rs.	1,328	0	0

Note.—Prices include labour in cutting mains and fixing saddles. Cost of saddles themselves are included under specials page.

LAYING AND JOINTING (INCLUDING EXCAVATION) WROUGHT-IRON GALVANIZED PIPES TO CONNECT EXISTING HOUSE SERVICES WITH NEW PIPES.

Diameter of Pipes.	Length of each Pipe.	Number of Pipes to be laid.	Length.	Rate per foot.			Amount.		
inches.	feet.		feet.	Rs.	A.	P.	Rs.	A.	P.
1½	5	17	85	0	0	6	2	10	6
1¼	5	428	2,140	0	0	5	55	11	8
1	5	3,852	19,260	0	0	4	401	4	0
			Total carried to summary page			Rs.	459	10	2

For cost of Pipes themselves, *see* page 16.

TAPPING MAINS AND FIXING FERRULES AND BENDS TO CONNECT EXISTING HOUSE SERVICES WITH NEW PIPES.

Diameter of Pipes.	Number required.	Rate of each.			Amount.		
inches.		Rs.	A.	P.	Rs.	A.	P.
1½	17	1	8	0	25	8	0
1¼	428	1	8	0	642	0	0
1	3,852	1	8	0	5,778	0	0
	Total carried to summary page			Rs.	6,445	8	0

CLEANING AND COATING WITH COMPOSITION OLD PIPES TO BE RE-LAID IN THE NEW SYSTEM.

Diameter of Pipes.	Length.	Rate per foot run.			Amount.		
inches.	feet.	Rs.	A.	P.	Rs.	A.	P.
18	6,525	0	9	0	3,670	5	0
16	5,045	0	8	6	2,680	2	6
14	220	0	8	0	110	0	0
9	880	0	7	0	385	0	0
7	880	0	6	0	330	0	0
6	2,400	0	5	9	862	8	0
5	880	0	5	6	302	8	0
4	2,750	0	5	6	945	5	0
* 2½	9,000	0	4	0	2,250	9	0
	Total carried to summary page			Rs.	11,535	12	6

EXCAVATION FOR OLD CAST-IRON PIPES TO BE RE-LAID IN THE NEW SYSTEM.

Diameter of Pipes.	Length.	Average Excavation.		Total cubic feet of earth.	Total Amount at Rs. 2 per 100 cubic feet.		
		Breadth.	Depth.				
inches.	feet.	feet.	feet.		Rs.	A.	P.
18	6,525	4	5¾	150,075	3,001	8	0
16	5,045	3¾	5½	104,053	2,081	1	0
14	220	3¾	5¼	4,331	86	9	11
9	880	3½	5	15,400	308	0	0
7	880	3½	4¾	14,630	292	9	7
6	2,400	3½	4¾	39,900	798	0	0
5	880	3	4½	11,880	237	9	7
4	2,750	3	4½	97,875	1,957	8	0
* 2½	9,000	2½	3	67,500	1,350	0	0
		Total carried to summary page		Rs.	10,112	14	1

* *Note.*—The 2½-inch Pipes are for use on Hydrant connections.

68—A

LAYING OLD CAST-IRON PIPES WHICH ARE TO FORM PART OF NEW SYSTEM.

Note.—Rate includes conveying Pipe to site, lowering into trench and placing in position. It does not include Jointing or Excavation.

Diameter of Pipes.	Length.	Rate per foot.			Amount.		
inches.	feet.	Rs.	A.	P.	Rs.	A.	P.
18	6,525	0	5	0	2,039	1	0
16	5,045	0	4	6	1,418	14	6
14	220	0	3	6	48	2	0
9	880	0	2	6	137	8	0
7	880	0	2	0	110	0	0
6	2,400	0	1	9	262	8	0
5	880	0	1	6	82	8	0
4	2,750	0	1	3	214	13	6
* 2½	9,000	0	0	9	421	14	0
	Total carried to summary page			Rs.	4,735	5	0

JOINTING OLD CAST-IRON SOCKET AND SPIGOT PIPES WHICH ARE TO FORM PART OF NEW SYSTEM, LEAD JOINTS.

Note.—Rate includes lead, yarn and labour, but is exclusive of laying.

Diameter of Pipes.	Total length of each size of Pipe.	Standard length of each Pipe.	Number of Joints.	Rate per Joint.			Amount.		
inches.	feet.	feet.		Rs.	A.	P.	Rs.	A.	P.
18	6,525	12	544	5	0	0	2,720	0	0
16	5,045	12	420	4	8	0	1,890	0	0
14	220	12	18	3	8	0	63	0	0
9	880	9	98	2	4	0	220	8	0
7	880	9	98	1	12	0	171	8	0
6	2,400	9	267	1	8	0	400	8	0
5	800	9	98	1	4	0	112	8	0
4	2,750	9	306	1	0	0	306	0	0
* 2½	9,000	9	1,000	0	10	0	625	0	0
	Total carried to summary page					Rs.	6,509	0	0

* *Note.*—The 2½-inch Pipes are for use on Hydrant connections.

DISJOINTING OLD PIPES AND REMOVING.

Diameter of Pipes.	Length of each size of Pipe.	Rate per foot.			Amount.		
inches.	feet.	Rs.	A.	P.	Rs.	A.	P.
18	7,250	0	6	6	2,945	5	0
16	5,605	0	6	0	2,101	14	0
14	245	0	5	6	84	3	6
9	1,750	0	4	0	437	8	0
7	1,750	0	3	6	382	13	0
6	4,800	0	3	0	900	0	0
5	1,750	0	2	6	273	7	0
4	5,500	0	2	0	687	8	0
3	24,370	0	1	9	2,665	7	6
2½	76,120	0	1	6	7,136	4	0
2	180,580	0	1	3	14,107	13	0
1¾	6,640	0	1	0	415	0	0
1½	2,850	0	0	9	133	9	6
1¼	1,160	0	0	6	36	4	0
	Total carried to summary page			Rs.	32,307	0	6

SUMMARY OF CAST-IRON PIPES AND SPECIALS INCLUDING PIPES, EXCAVATION, LAYING AND JOINTING.

Description.	From page	Amount. Rs.	A.	P.	Total. Rs.	A.	P.
Cast-iron Pipes, Specials & Valves, etc.							
Straight Socket and Spigot Cast-iron Pipes...	238	18,93,621	10	8			
Socket and Spigot Cast-iron Bends ...	241	14,903	14	10			
Socket and Spigot Cast-iron Tee Branches for Mains	243	33,592	5	4			
Socket and Spigot Cast-iron Tee Branches for Air Valves	245	1,720	15	2			
Socket and Spigot Cast-iron Branches for connecting new Pipes to existing Hydrants.	246	3,509	7	4			
Socket and Spigot Cast-iron Branches for connecting new Pipes to existing Fountains.	246	7,543	10	7			
Socket and Spigot Cast-iron Taper Pipes where Mains are reduced in size ...	247	3,570	0	3			
Socket and Spigot Cast-iron Taper Pipes for reducing Mains to Waste Detecting Meter connections	248	2,695	11	3			
Cast-iron Flanged Taper Pipes for reducing Mains to Sluice Valve connection ...	249	5,353	0	7			
Cast-iron Saddles for connecting existing Mains to new system	250	9,870	4	0			
Cast-iron Collars for Mains for connections to existing Hydrants and Fountains ...	251	1,804	6	10			
Sluice Valves	252	91,650	0	0			
Waste Detecting Meters fixed on distributory mains	253	68,680	0	0			
Double Air Valves with screw down Valve combined	253	730	0	0			
Venturi Meters with combined diagram and Counter Recorder	254	48,300	0	0			
Hatch Boxes and Scour Pipe connections to Venturi Meters	254	4,000	0	0			
Surface Boxes for Sluice Valve Chambers ...	255	11,138	0	0			
Wrought-iron Pipes and Fittings for connecting to existing House Services ...	256	27,949	13	0			
Carried forward Rs...	...	...	...	...	22,30,633	3	10

Summary of Cast-iron Pipes and Specials, including Pipes, Excavation, Laying and Jointing—(*concld.*)

Description.	From page	Amount.			Total.		
		Rs.	A.	P.	Rs.	A.	P.
Brought forward ...		...	...	...	22,30,633	3	10
Labour and Materials for Excavation for Laying, Jointing, etc., of Pipes and Specials.							
Excavation for Laying Cast-iron Pipes ...	257	2,26,075	1	10			
Laying Cast-iron Pipes	258	89,765	15	9			
Jointing Cast-iron Pipes, Socket and Spigot Main Pipes	259	1,27,494	4	0			
Jointing Socket and Spigot Cast-iron Bends...	260	1,051	4	0			
Jointing Socket and Spigot Cast-iron Branches	261	3,084	8	0			
Jointing Cast-iron Tapers	263	557	4	0			
Making Collar Joints	264	2,601	4	0			
Cutting Mains and fixing Cast-iron Saddles for connecting existing Mains to new system	265	1,328	0	0			
Laying and Jointing Wrought-iron Galvanized Pipes for connecting to existing House Services...	266	459	10	2			
Tapping Mains and fixing Ferrules and Bends for connecting existing House Services ...	266	6,445	8	0			
Cleaning and Coating old Pipes to be re-laid in the new system	267	11,535	12	6			
Excavation for Laying old Cast-iron Pipes to be re-laid in new system	267	10,112	14	1			
Laying old Cast-iron Pipes to be used in new system	268	4,735	5	0			
Jointing old Cast-iron Pipes to be re-laid in scheme	268	6,509	0	0			
Disjointing old Pipes and removing ...	269	32,307	0	6	5,24,062	11	10
	...	...	...	...	27,54,695	15	8
Add for Contingencies, Supervision and Establishment...	...	...	...	...	2,75,304	0	4
				Total Rs...	30,30,000	0	0

STREET FOUNTAINS.

Quantity.	Description of Works.	Rate. Rs.	A.	P.	Per	Amount. Rs.	A.	P.
	Constructing a Cast-iron Pillar Fountain, including supplying and fixing of Pipes, Fittings, etc.—(*see* **Drawing No. 45.**)							
76 c. ft.	Earthwork, excavation, refilling, lighting, watching, removing surplus excavation and restoring road surface	2	0	0	100 c. ft.	1	8	4
44 „	Concrete in cement mortar in platform	55	0	0	„	24	3	4
5 „	Brickwork in cement mortor in platform	50	0	0	„	2	8	0
28 „	Brick on edge in cement mortar in platform curb	55	0	0	„	15	6	5
1·16 „	Granite stone on which to rest chatties	2	8	0	1 c. ft.	2	14	5
116 sq. ft.	Plastering platform with cement 1½″ thick	8	0	0	100 sq. ft.	9	4	6
100 „	Gravelling 4″ thick all round floor curb	2	4	0	„	2	4	0
30 l. ft.	2″ W. I. pipes, galvanized ...	0	7	0	l. ft.	13	2	0
1 No.	2″ × 1¼″ W. I. reducing coupling, galvanized	0	5	0	each	0	5	0
1 „	1¼″ Gun-metal stopcock ...	5	0	0	„	5	0	0
1 „	Brown's patent surface box for stopcock	3	0	0	„	3	0	0
7 l. ft.	1¼″ W. I. pipes, galvanized ...	0	5	0	l. ft.	2	3	0
1 No.	1¼″ W. I. elbow, galvanized ...	0	8	0	each	0	8	0
1 „	Ornamental cast-iron water post fitted with 1¼″ W. I., galvanized iron waste-not taps	40	0	0	„	40	0	0
2 „	1¼″ W. I. bend, galvanized ...	1	0	0	„	2	0	0
1 „	Ferrule	5	0	0	„	5	0	0
30 l. ft.	Laying and jointing 2″ W. I. piping with bends, etc., complete, including excavation and restoring road surface	0	2	0	l. ft.	3	12	0
7 „	Laying and jointing 1¼″ W. I. piping with bends, etc., complete, including excavation and restoring road surface	0	1	0	„	0	7	0
1 No.	Fixing surface box and stopcock ...	0	2	0	each	0	2	0
1 „	Tapping mains and fixing ferrule and bends	1	8	0	„	1	8	0
						135	0	0
	Sundries at 5%, say ...	...	...	...		20	0	0
	Total Rs...	...	...	...		155	0	0

Street Fountains—(*contd.*)

Quantity.	Description of Works.	Rate. Rs.	A.	P.	Per	Amount. Rs.	A.	P.
	Constructing a Double Tap Masonry Pillar Fountain, including supplying and fixing Pipes, Fittings, etc.—(*see* Drawing No. 43.)							
66 c. ft.	Earthwork, excavation, refilling, lighting, watching, removing surplus excavation and restoring road surface	2	0	0	100 c. ft.	1	5	1
28 „	Concrete in cement mortar in platform	55	0	0	„	15	6	5
61 „	Brickwork in cement mortar in platform and pillar	55	0	0	„	33	8	10
26 „	Brick on edge in cement mortar curb	50	0	0	„	13	0	0
7 „	Coping over top wall	55	0	0	„	3	13	7
1·18 „	Granite stone on which to rest chatties	2	8	0	1 c. ft.	2	15	2
100 sq. ft.	Gravelling 4″ thick in front and at the side of platform	2	4	0	100 sq. ft.	2	4	0
159 „	Plastering with cement ½″ thick ...	8	0	0	„	12	11	6
30 l. ft.	2″ W. I. pipes, galvanized ...	0	7	0	l. ft.	13	2	0
1 No.	2″ × 1¼″ W. I. reducing coupling, galvanized	0	5	0	each	0	5	0
1 „	1¼″ Gun-metal stopcock ...	5	0	0	„	5	0	0
1 „	Brown's patent surface box for stopcock	3	0	0	„	3	0	0
15 l. ft.	1¼″ W. I. pipes, galvanized ...	0	5	0	l. ft.	4	11	0
9 „	¾″ W. I. pipes, galvanized ...	0	3	0	„	1	11	0
1 No.	1¼″ W. I. elbow, galvanized ...	0	8	0	each	0	8	0
1 „	1¼″ × ¾″ × ¾″ tee, galvanized ...	0	4	0	„	0	4	0
2 „	¾″ W. I. elbow, reducing ...	0	5	0	„	0	10	0
2 „	1¼″ W. I. bend	1	0	0	„	2	0	0
2 „	½″ Waste-not self-closing tap ...	13	0	0	„	26	0	0
1 „	Ferrule	5	0	0	„	5	0	0
	Carried forward Rs...	...	...	...		147	3	7

Street Fountains—(*contd.*)

Quantity.	Description of Works.	Rate.			Per	Amount.		
		Rs.	A.	P.		Rs.	A.	P.
	Brought forward ...	...	...	...		147	3	7
30 l. ft.	Laying and jointing 2" W. I. pipes with bends, etc., complete, including excavation and restoring road surface	0	2	0	l. ft.	3	12	0
15 „	Laying and jointing 1¼" W. I. pipes with bends, etc., complete, including excavation and restoring road surface	0	1	0	„	0	15	0
9 „	Laying and jointing ¾" W. I. pipes with bends, etc., complete, including excavation and restoring road surface	0	0	6	„	0	4	6
1 No.	Tapping mains and fixing ferrule and bends	1	8	0	each	1	8	0
1 „	Fixing surface box and stopcock ...	0	2	0	„	0	2	0
						153	13	1
	Sundries at 5 %, say ...	...	...	...		6	2	11
	Total Rs...	...	...	...		160	0	0

Street Fountains—(*contd.*)

Quantity.	Description of Works.	Rate. Rs.	A.	P.	Per	Amount. Rs.	A.	P.
	Constructing a Single Tap Masonry Pillar Fountain supply and delivery of Piping, etc., required and fixing the same—(*see* Drawing No. 42.)							
73 c. ft.	Earthwork, excavation, refilling, lighting, watching and removing surplus excavation and restoring road surface	2	0	0	100 c. ft.	1	7	4
26 „	Concrete in special mortar in platform	55	0	0	„	14	4	10
13 „	Brick on edge with cement and pointing in platform curb ...	55	0	0	„	7	2	5
36 „	Brickwork in cement mortar in pillar	50	0	0	„	18	0	0
2 „	Coping to pillar	50	0	0	„	1	0	0
·62 „	Granite stone on which to rest chatties	2	8	0	1 c. ft.	1	8	10
100 sq. ft.	Gravelling 4″ thick in front and at side of fountain	2	4	0	100 sq. ft.	2	4	0
111 „	Plastering with cement ½″ thick ...	8	0	0	„	8	14	1
30 l. ft.	2″ W. I. pipes, galvanized ...	0	7	0	l. ft.	13	2	0
1 No.	2″ × 1¼″ W. I. reducing coupling, galvanized	0	5	0	each	0	5	0
1 „	1¼″ Gun-metal stopcock ...	5	0	0	„	5	0	0
1 „	Brown's patent surface box for stopcock	3	0	0	„	3	0	0
6 l. ft.	1¼″ W. I. pipes, galvanized pipes ...	0	5	0	l. ft.	1	14	0
4 „	¾″ W. I. pipes, galvanized pipes ...	0	3	0	„	0	12	0
1 No.	1¼″ × ¾″ W. I. reducing elbow ...	0	8	0	each	0	8	0
2 „	¾″ W. I. reducing elbow ...	0	5	0	„	0	10	0
2 „	1¼″ W. I. bend	1	0	0	„	2	0	0
1 „	½″ Waste-not self-closing valve ...	13	0	0	„	13	0	0
1 „	Ferrule	5	0	0	„	5	0	0
30 l. ft.	Laying and jointing 2″ W. I. pipes with bends, etc., complete including excavation and restoring road surface	0	2	0	l. ft.	3	12	0
	Carried forward Rs...	...	...	...		103	8	6

Street Fountains—(*concld.*)

Quantity.	Description of Works.	Rate.			Per	Amount.		
		Rs.	A.	P.		Rs.	A.	P.
	Brought forward ...	...	...	...		103	8	6
6 l. ft.	Laying and jointing 1¼" W. I. Pipes with Bends, etc., complete, including excavation and restoring road surface	0	1	0	l. ft.	0	6	0
4 „	Laying and jointing ¾" W. I. Piping with Bends. etc., complete, including excavation and restoring road surface	0	0	6	„	0	2	0
1 No.	Tapping mains and fixing ferrule and bends	1	8	0	each	1	8	0
1 „	Fixing surface box and stopcock ...	0	2	0	„	0	2	0
						105	10	6
	Sundries at 5 %, say ...	...	...	...		4	5	6
	Total Rs...	...	...	...		110	0	0

STREET FOUNTAINS AND SEWER FLUSHING ARRANGEMENTS.

Quantity.	Description of Works.	Rate.			Per	Amount.		
		Rs.	A.	P.		Rs.	A.	P.
	Constructing a Double Tap Masonry Pillar Fountain at head of shallow sewers, including supplying and fixing Pipes, Fittings, etc., suitable for Flushing Sewers —(*see* Drawing No. 44.)							
63 c. ft.	Earthwork, excavation, refilling, lighting, watching and removing surplus excavation and restoring road surface	2	0	0	100 c. ft.	1	4	2
46 „	Concrete in special mortar in platform	55	0	0	„	25	4	10
26 „	Brickwork in special mortar in masonry pillar	50	0	0	„	13	0	0
22 „	Brick on edge with cement and pointing in platform curb ...	55	0	0	„	12	1	7
100 sq. ft.	Gravelling 4″ thick in front and at the side of fountain	2	4	0	100 sq. ft.	2	4	0
1 c. ft.	Granite stone on which to rest chatties	2	8	0	1 c. ft.	2	8	0
18 „	Sand filling...	1	0	0	100 c. ft.	0	2	10
192 sq. ft.	Plastering with cement ½″ thick	8	0	0	100 sq. ft.	15	5	9
7 c. ft.	Coping to pillar	55	0	0	100 c. ft.	3	13	7
30 l. ft.	2″ W. I Pipes, galvanized Pipes ...	0	7	0	l. ft.	13	2	0
1 No.	2″ × 1¼″ W. I. reducing coupling, galvanized	0	5	0	each	0	5	0
1 „	1¼″ Gun-metal stopcock ...	5	0	0	„	5	0	0
1 „	Brown's patent surface box for stopcock	3	0	0	„	3	0	0
15 l. ft.	1¼″ W. I. Pipes, galvanized Pipes...	0	5	0	l. ft.	4	11	0
9 „	¾″ Pipes, galvanized Pipes ...	0	3	0	„	1	11	0
1 No.	1¼″ W. I. elbow, galvanized ..	0	8	0	each	0	8	0
1 „	1¼″ × ¾″ × ¾″ tee, galvanized ...	0	4	0	„	0	4	0
2 „	¾″ W. I. elbow, galvanized ...	0	5	0	„	0	10	0
	Carried forward Rs ..	...	...	...		104	15	9

Street Fountains and Sewer Flushing Arrangements—(*contd.*)

Quantity.	Description of Works.	Rate.			Per	Amount.		
		Rs.	A.	P.		Rs.	A.	P
	Brought forward ...	...	...	...		104	15	9
2 No.	1¼″ Bend	1	0	0	each	2	0	0
2 „	½″ Waste-not self-closing valve ...	13	0	0	„	26	0	0
1 „	Ferrule	5	0	0	„	5	0	0
30 l. ft.	Laying and jointing 2″ W. I. pipes with bends, etc., complete, including excavation and restoring road surface	0	2	0	l. ft.	3	12	0
15 „	Laying and jointing 1¼″ W. I. pipes with bends, etc., complete, including excavation and restoring road surface	0	1	0	„	0	15	0
9 „	Laying and jointing ¾″ W. I. pipes with bends, etc., complete, including excavation and restoring road surface	0	0	6	„	0	4	6
1 No.	Tapping mains and fixing ferrules and bends	1	8	0	each	1	8	0
1 „	Fixing surface boxes and stopcock...	0	2	0	„	0	2	0
						144	9	3
	Sundries at 5 %, say ...	...	...	...		10	6	9
	Total Rs...	...	...	...		155	0	0

STREET FOUNTAINS AND LATRINE FLUSHING ARRANGEMENTS.

Quantity.	Description of Works.	Rate.			Per	Amount.		
	Constructing a Washing place connected with a flushing Latrine—(*see* **Drawing No. 46.**)	Rs.	A.	P.		Rs.	A.	P.
48 c. ft.	Earthwork, excavation, refilling, lighting, watching and removing surplus excavation and restoring road surface	2	0	0	100 c. ft.	0	15	4
46 „	Concrete in cement mortar ...	55	0	0	„	25	4	10
30 „	Brickwork in cement mortar ...	50	0	0	„	15	0	0
135 sq. ft.	Plastering with cement, ½″ thick ...	8	0	0	100 sq. ft.	10	12	10
0·62 c. ft.	Granite stones	2	8	0	1 c. ft.	1	8	10
37 „	Sand filling	1	0	0	100 c. ft.	0	5	11
100 sq. ft.	Gravelling 4″ thick in front and at the slide of fountain	2	4	0	100 sq. ft.	2	4	0
1 No.	Sheet iron tipping box for waste water, with axles and bearings fitted in, supplying and fixing, etc., complete	45	0	0	each	45	0	0
1 „	Door for tipping chamber complete.	22	0	0	„	22	0	0
1 „	C. I. Grating	0	8	0	„	0	8	0
30 l. ft.	2″ W. I. pipes, galvanized ...	0	7	0	l. ft.	13	2	0
1 No.	2″ × 1½″ W. I. reducing coupling, galvanized	0	5	0	each	0	5	0
1 „	1¼″ Gun-metal stopcock ...	5	0	0	„	5	0	0
1 „	Brown's patent surface box for stopcock	3	0	0	„	3	0	0
6 l. ft.	1¼″ W. I. pipes, galvanized ...	0	5	0	l. ft.	1	14	0
4 „	¾″ W. I. pipes, galvanized ...	0	3	0	„	0	12	0
1 No.	1¼″ × ¾″ W. I. reducing elbow ...	0	8	0	each	0	8	0
2 „	¾″ W. I. reducing elbow ...	0	5	0	„	0	10	0
2 „	1¼″ W. I. bend	1	0	0	„	2	0	0
1 „	½″ Waste-not self-closing valve ...	13	0	0	„	13	0	0
1 „	Ferrule	5	0	0	„	5	0	0
30 l. ft.	Laying and jointing 2″ W. I. piping with bends, etc., complete, including excavation and restoring road surface	0	2	0	l. ft.	3	12	0
6 „	Laying & jointing 1¼″ W. I. pipes, etc.	0	1	0	„	0	6	0
4 „	Laying & jointing ¾″ W. I. piping, etc.	0	0	6	„	0	2	0
1 No.	Tapping mains and fixing ferrules and bends	1	8	0	each	1	8	0
1 „	Fixing surface box and stopcock ...	0	2	0	„	0	2	0
						174	12	9
	Sundries at 5 %, say ...	...	...	...		10	3	3
	Total Rs...	...	...	...		185	0	0

STREET FOUNTAINS.

Summary of Costs from detailed Estimates (Pages 271 to 278).

Quantity.	Description of Works.	Rate.			Amount.		
		Rs.	A.	P.	Rs.	A.	P
No. 100	Constructing cast-iron pillar fountains, including supplying and fixing of pipes, fittings, etc.	155	0	0	15,500	0	0
„ 200	Constructing double tap masonry pillar fountains, including supplying and fixing pipes, fittings, etc.	160	0	0	32,000	0	0
„ 300	Constructing single tap masonry pillar fountains, including supplying and fixing pipes, fittings, etc.	110	0	0	33,000	0	0
					80,500	0	0
	Contingencies and petty supervision, etc., at 10 %, say	...	...	...	8,050	0	0
	Total carried to summary page Rs.	...	...	...	88,550	0	0

Note.—No separate allowance has been made for washing places and fountains connected with flush-out Latrines, or with sewer-flushing tanks. Any used in this way will be charged against the above estimate of Rs. 88,550, and the number of fountains unconnected with flushing arrangements will be correspondingly decreased.

SLUICE VALVE CHAMBERS.

Quantity.	Description of Works.	Rate. Rs.	A.	P.	Per	Amount. Rs.	A.	P.
	Constructing Chamber for 2½-inch Hydrant Valve—(*see* Drawing No. 47.)							
36 c. ft.	Earthwork, excavation net outside pipe trench, including timbering, pumping, etc.	6	0	0	100 c. ft.	2	2	6
5 „	Concrete in combination mortar ...	35	0	0	„	1	12	0
7 „	Brickwork in combination mortar...	32	0	0	„	2	3	10
2·38 „	Granite stones	2	8	0	1 c. ft.	5	15	2
6 sq. ft.	Plastering with cement ½″ thick ...	8	0	0	100 sq. ft.	0	7	8
2 c. ft.	Tar granite macadam	0	8	0	1 c. ft.	1	0	0
2 „	Archwork in combination mortar ...	35	0	0	100 c. ft.	0	11	2
1 No.	Fixing 2½″ valve and surface box 6″ × 6″ × 10″ deep	1	8	0	each	1	8	0
						15	12	4
	Sundries at 5 %, say ...	...	...	...		0	11	8
	Total Rs...	...	...	...		16	8	0
	Constructing Chamber for new 3-inch Valves required on existing Pipes—(see Drawing No. 47.)							
34 c. ft.	Earthwork, excavation net outside pipe trench, including timbering, pumping, etc.	6	0	0	100 c. ft.	2	0	8
5 „	Concrete in combination mortar ...	35	0	0	„	1	12	0
8 „	Brickwork in combination mortar...	32	0	0	„	2	9	0
9 sq. ft.	Plastering with cement ½″ thick ...	8	0	0	100 sq. ft	0	11	6
2 c. ft.	Archwork in combination mortar ...	35	0	0	100 c. ft.	0	11	2
2·65 „	Granite stones	2	8	0	1 c. ft.	6	10	0
2 „	Tar granite macadam	0	8	0	„	1	0	0
1 No.	Fixing 3″ valve and surface box 6″ × 6″ × 10″ deep	2	0	0	each	2	0	0
						17	6	4
	Sundries at 5 %, say ...	...	...	...		1	1	8
	Total Rs...	...	...	...		18	8	0

Sluice Valve Chambers—(*contd.*)

Quantity.	Description of Works.	Rate. Rs.	A.	P.	Per	Amount. Rs.	A.	P.
	Constructing Chamber for new 4-inch Valves—(*see* Drawing No. 47.)							
35 c. ft.	Earthwork, excavation net outside pipe trench, including timbering, pumping, etc.	6	0	0	100 c. ft.	2	1	7
5 „	Concrete in combination mortar ...	35	0	0	„	1	12	0
12 „	Brickwork in combination mortar ...	32	0	0	„	3	13	5
11 sq. ft.	Plastering with cement ½" thick ...	8	0	0	100 sq. ft.	0	14	1
3 c. ft.	Archwork in combination mortar ...	35	0	0	100 c. ft.	1	0	9
2·65 „	Granite stones	2	8	0	1 c. ft.	6	10	0
2 „	Tar granite macadam	0	8	0	„	1	0	0
1 No.	Fixing 4" valve and surface box 9" × 9" × 10" deep	2	0	0	each	2	0	0
						19	3	10
	Sundries at 5 %, say ...	...	...	...		0	12	2
	Total Rs...	...	...	...		20	0	0
	Constructing Chamber for new 5-inch Valves—(*see* Drawing No. 47.)							
38 c. ft.	Earthwork, excavation net outside pipe trench, including timbering, pumping, etc.	6	0	0	100 c. ft.	2	4	6
5 „	Concrete in combination mortar ...	35	0	0	„	1	12	0
12 „	Brickwork in combination mortar ...	32	0	0	„	3	13	5
11 sq. ft.	Plastering with cement ½" thick ...	8	0	0	100 sq. ft.	0	14	1
3 c. ft.	Archwork in combination mortar ...	35	0	0	100 c. ft.	1	0	9
2·65 „	Granite stones	2	8	0	1 c. ft.	6	10	0
2 „	Tar granite macadam	0	8	0	„	1	0	0
1 No.	Fixing 5" valve and surface box 9" × 9" × 10" deep	2	8	0	each	2	8	0
						19	14	9
	Sundries at 5 %, say ...	...	...	...		1	1	3
	Total Rs...	...	...	...		21	0	0

Sluice Valve Chambers—(*contd.*)

Quantity.	Description of Works.	Rate. Rs	A.	P.	Per	Amount. Rs.	A.	P.
	Constructing Chamber for new 6-inch Valves—(*see* **Drawing No. 47.**)							
38 c. ft.	Earthwork, excavation net outside pipe trench, including timbering, pumping, etc.	6	0	0	100 c. ft.	2	4	6
5 „	Concrete in combination mortar ...	35	0	0	„	1	12	0
12 „	Brickwork in combination mortar ...	32	0	0	„	3	13	5
12 sq. ft.	Plastering with cement ½″ thick ...	8	0	0	100 sq. ft.	0	15	4
3 c. ft.	Archwork in combination mortar ...	35	0	0	100 c. ft.	1	0	9
2·65 „	Granite stones	2	8	0	1 c. ft.	6	10	0
2 „	Tar granite macadam	0	8	0	„	1	0	0
1 No.	Fixing 6″ valve and surface box 9″ × 9″ × 10″ deep	3	0	0	each	3	0	0
						20	8	0
	Sundries at 5 °/ₒ, say ...	...	...	...		1	8	0
	Total Rs...	...	...	...		22	0	0
	Constructing Chamber for new 7-inch Valves—(*see* **Drawing No. 47.**)							
50 c. ft.	Earthwork, excavation net outside pipe trench, including timbering, pumping, etc.	6	0	0	100 c. ft.	3	0	0
6 „	Concrete in combination mortar ...	35	0	0	„	2	1	7
14 „	Brickwork in combination mortar ...	32	0	0	„	4	7	8
3 „	Archwork in combination mortar ...	35	0	0	„	1	0	9
12 sq. ft.	Plastering with cement ½″ thick ...	8	0	0	100 sq. ft.	1	10	10
3·24 c. ft.	Granite stones	2	8	0	1 c. ft.	8	1	7
2 „	Tar granite macadam	0	8	0	„	1	0	0
1 No.	Fixing 7″ valve and surface box 9″ × 9″ × 10″ deep	3	8	0	each	3	8	0
						24	14	5
	Sundries at 5 °/ₒ, say ...	...	..	...		1	1	7
	Total Rs...	...	...	...		26	0	0

Sluice Valve Chambers—(*contd.*)

Quantity.	Description of Works.	Rate. Rs.	Rate. A.	Rate. P.	Per	Amount. Rs.	Amount. A.	Amount. P.
	Constructing Chamber for new 8-inch Valves—(*see* **Drawing No. 48.**)							
52 c. ft.	Earthwork, excavation net outside pipe trench, including timbering, pumping, etc.	6	0	0	100 c. ft.	3	1	11
6 „	Concrete in combination mortar ...	35	0	0	„	2	1	7
17 „	Brickwork in combination mortar ...	32	0	0	„	5	7	0
18 sq. ft.	Plastering with cement ½″ thick ...	8	0	0	100 sq. ft.	1	7	0
3 c. ft.	Archwork in combination mortar ...	35	0	0	100 c. ft.	1	0	9
3·24 „	Granite stones	2	8	0	1 c. ft.	8	1	7
2 „	Tar granite macadam	0	8	0	„	1	0	0
1 No.	Fixing 8″ valve and surface box 9″ × 9″ × 10″ deep	4	0	0	each	4	0	0
						26	3	10
	Sundries at 5 °/ₒ, say ...	...	...	...		1	4	2
	Total Rs...	...	...	...		27	8	0
	Constructing Chamber for new 9-inch Valves—(*see* **Drawing No. 48.**)							
56 c. ft.	Earthwork, excavation net outside pipe trench, including timbering, pumping, etc.	6	0	0	100 c. ft.	3	5	9
6 „	Concrete in combination mortar ...	35	0	0	„	2	1	7
19 „	Brickwork in combination mortar ...	32	0	0	„	6	1	3
18 sq. ft.	Plastering with cement ½″ thick ...	8	0	0	100 sq. ft.	1	7	0
4 c. ft.	Archwork in combination mortar ...	35	0	0	100 c. ft.	1	6	4
3·87 „	Granite stones	2	8	0	1 c. ft.	9	10	9
2 „	Tar granite macadam	0	8	0	„	1	0	0
1 No.	Fixing 9″ valve and surface box 12″ × 12″ × 10″ deep... ...	4	8	0	each	4	8	0
						29	8	8
	Sundries at 5 °/ₒ, say...	...	...	...		1	7	4
	Total Rs...	...	...	...		31	0	0

Sluice Valve Chambers—(*contd.*)

Quantity.	Description of Works.	Rate. Rs.	A.	P.	Per	Amount. Rs.	A.	P.
	Constructing a Chamber for new 10-inch Valves—(*see* Drawing No. 48.)							
71 c. ft.	Earthwork, excavation net outside pipe trench, including timbering, pumping, etc.	6	0	0	100 c. ft.	4	4	2
7 „	Concrete in combination mortar ...	35	0	0	„	2	7	2
23 „	Brickwork in combination mortar...	32	0	0	„	7	5	9
25 sq. ft.	Plastering with cement ½" thick ...	8	0	0	100 sq. ft.	2	0	0
4 c. ft.	Archwork in combination mortar ...	35	0	0	100 c. ft.	1	6	4
4·17 „	Granite stones	2	8	0	1 c. ft.	10	6	9
2 „	Tar granite macadam	0	8	0	„	1	0	0
1 No.	Fixing 10" valve and surface box 12" × 12" × 10" deep ...	5	0	0	each	5	0	0
						33	14	2
	Sundries at 5 %, say ...	...	...	...		1	9	10
	Total Rs...	...	...	...		35	8	0
	Constructing a Chamber for new 12-inch Valves—(*see* Drawings Nos. 48 and 49.)							
74 c. ft.	Earthwork, excavation net outside pipe trench, including timbering, pumping, etc. ..	6	0	0	100 c. ft.	4	7	0
7 „	Concrete in combination mortar ...	35	0	0	„	2	7	2
25 „	Brickwork in combination mortar...	32	0	0	„	8	0	0
27 sq. ft.	Plastering with cement ½" thick ...	8	0	0	100 sq. ft.	2	2	7
4 c. ft.	Archwork in combination mortar ...	35	0	0	100 c. ft.	1	6	4
4·17 „	Granite stones	2	8	0	1 c. ft.	10	6	9
2 „	Tar granite macadam	0	8	0	„	1	0	0
1 No.	Fixing 12" valve and surface box 12" × 12" × 10" deep ...	6	0	0	each	6	0	0
						35	13	10
	Sundries at 5 %, say ...	...	...	...		1	10	2
	Total Rs...	...	...	...		37	8	0

Sluice Valve Chambers—(*contd.*)

Quantity.	Description of Works.	Rate.			Per	Amount.		
		Rs.	A.	P.		Rs.	A.	P.
	Constructing a Chamber for new 18-inch Valves—(*see* **Drawing No. 50.**)							
193 c. ft.	Earthwork, excavation net outside pipe trench, including timbering, pumping, etc.	6	0	0	100 c. ft.	11	9	3
21 „	Concrete in combination mortar ...	35	0	0	„	7	5	7
61 „	Brickwork in combination mortar...	32	0	0	„	19	8	4
55 sq. ft.	Plastering with cement ½″ thick ...	8	0	0	100 sq. ft.	4	6	5
12 c. ft.	Archwork in combination mortar ...	35	0	0	100 c. ft.	4	3	2
9·87 „	Granite stones	2	8	0	1 c. ft.	24	10	9
3 „	Tar granite macadam	0	8	0	„	1	8	0
1 No.	Fixing 18″ sluice valve and surface box 15″ × 12″ × 10″ deep ...	8	8	0	each	8	8	0
						81	11	6
	Sundries at 5 %, say ...	...	...	...		3	4	6
	Total Rs...	...	...	...		85	0	0
	Constructing a Chamber for new 24-inch Valves—(*see* **Drawing No. 51.**)							
421 c. ft.	Earthwork, excavation net outside pipe trench, including timbering, pumping, etc.	6	0	0	100 c. ft.	25	4	2
39 „	Concrete in combination mortar ...	35	0	0	„	13	10	5
150 „	Brickwork in combination mortar...	32	0	0	„	48	0	0
92 sq. ft.	Plastering with cement ½″ thick ...	8	0	0	100 sq. ft.	7	5	9
13 c. ft.	Archwork in combination mortar ...	35	0	0	100 c. ft.	4	8	9
13·04 „	Granite stones	2	8	0	1 c. ft.	32	9	7
3 „	Tar granite macadam	0	8	0	„	1	8	0
1 No.	Fixing sluice valve and surface box 18″ × 12″ × 10″ deep ...	10	0	0	each	10	0	0
						142	14	8
	Sundries at 5 %, say...	...	...	...		7	1	4
	Total Rs...	...	...	...		150	0	0

Sluice Valve Chambers—(*concld.*)

Summary of Cost from detailed Estimates (Pages 280 to 285).

Quantity.	Description of Works.	Rate.			Amount.		
		Rs.	A.	P.	Rs.	A.	P.
29 No.	Constructing Chamber for 3-in. Sluice Valve.	18	8	0	536	8	0
1,257 „	„ „ 4 „ „ ...	20	0	0	25,140	0	0
28 „	„ „ 5 „ „ ...	21	0	0	588	0	0
22 „	„ „ 6 „ „ ...	22	0	0	484	0	0
33 „	„ „ 7 „ „ ...	26	0	0	858	0	0
3 „	„ „ 8 „ „ ...	27	8	0	82	8	0
2 „	„ „ 9 „ „ ...	31	0	0	62	0	0
3 „	„ „ 10 „ „ ...	35	8	0	106	8	0
17 „	„ „ 12 „ „ ...	37	8	0	637	8	0
3 „	„ „ 18 „ „ ...	85	0	0	255	0	0
4 „	„ „ 24 „ „ ...	150	0	0	600	0	0
					29,350	0	0
	Contingencies and petty supervision, etc., at 10 %, say	...	...	...	2,950	0	0
	Total carried to summary page Rs.	...	...	...	32,300	0	0

Note.—Price of Sluice Valves and Surface Boxes to suit Chambers are included in Cast-iron "Pipes and Specials." Pages 252 and 255.

WASTE DETECTING METER CHAMBERS.

Quantity.	Description of Works.	Rate.			Per	Amount.		
		Rs.	A.	P.		Rs.	A.	P.
	Constructing Chamber for 4-inch Meter—(*see* Drawing No. 52.)							
240 c. ft.	Earthwork, excavation net outside pipe trench, including timbering, pumping, etc.	6	0	0	100 c. ft.	14	6	5
40 „	Concrete in special mortar ...	35	0	0	„	14	0	0
87 „	Brickwork in special mortar ...	32	0	0	„	27	13	5
3 „	Archwork in special mortar ...	35	0	0	„	1	0	9
63 sq. ft.	Plastering with cement ½″ thick ...	8	0	0	100 sq. ft.	5	0	8
7·5 c. ft.	Granite stones	2	8	0	1 c. ft.	18	12	0
1 No.	Surface box	3	0	0	each	3	0	0
1 „	Cover, cast-iron	22	0	0	„	22	0	0
3 „	Foot irons	0	12	0	„	2	4	0
1 „	Fixing meters	1	8	0	„	1	8	0
						109	13	3
	Sundries at 5 %, say ...	...	...	...		5	2	9
	Total Rs...	...	...	...		115	0	0
	Say ...	...	...	...		120	0	0
	Constructing Chamber for 6-inch and 8-inch Meters —(*see* Drawing No. 52.)							
386 c. ft.	Earthwork, excavation net outside pipe trench, including timbering, pumping, etc.	6	0	0	100 c. ft.	23	2	7
50 „	Concrete in special mortar ...	35	0	0	„	17	8	0
151 „	Brickwork in special mortar ...	32	0	0	„	48	5	1
7 „	Archwork in special mortar ...	35	0	0	„	2	7	2
112 sq. ft.	Plastering with cement ½″ thick ...	8	0	0	100 sq. ft.	8	15	4
12 c. ft.	Granite stones	2	8	0	1 c. ft.	30	0	0
1 No.	Surface box	3	0	0	each	3	0	0
1 „	Cover, cast-iron	22	0	0	„	22	0	0
4 „	Foot irons	0	12	0	„	3	0	0
1 „	Fixing meters	3	8	0	„	3	8	0
						161	14	2
	Sundries at 5 %, say...	...	...	...		8	1	10
	Total Rs...	...	...	...		170	0	0

Waste Water Detecting Meter Chambers—(*contd.*)

Summary of Costs from detailed Estimates (Page 287).

Quantity.	Description of Works.	Rate.			Amount.		
		Rs.	A.	P.	Rs.	A.	P.
6 No.	Constructing a 8″ waste water detecting meter chamber	170	0	0	1,020	0	0
58 „	Constructing a 6″ waste water detecting meter chamber	170	0	0	9,860	0	0
56 „	Constructing a 4″ waste water detecting meter chamber	120	0	0	6,720	0	0
					17,600	0	0
	Contingencies and petty supervision, etc., at 10 °/o, say	...	...	...	1,760	0	0
	Total carried to summary page Rs.	...	...	...	19,360	0	0

Note.—Waste Detecting Meters, extra Tapers and Collars for fixing meters are included in "Pipes and Special Castings." Pages 248 and 251.

AIR VALVE CHAMBERS.

Quantity.	Description of Works.	Rate.			Per	Amount.		
		Rs.	A.	P.		Rs.	A.	P.
	Constructing a 3-inch Air Valve Chamber—(*see* **Drawing No. 54.**)							
173 c. ft.	Earthwork, excavation net outside pipe trench, including timbering, pumping, etc.	6	0	0	100 c. ft.	10	6	1
23 „	Concrete in combination mortar ...	35	0	0	„	8	0	10
46 „	Brickwork in combination mortar ...	32	0	0	„	14	11	6
5 „	Archwork in combination mortar ...	35	0	0	„	1	12	0
69 sq. ft.	Plastering with cement ½″ thick ...	8	0	0	100 sq. ft.	5	8	4
4·50 c. ft.	Granite stones	2	8	0	1 c. ft.	11	4	0
3 No.	Step iron	0	12	0	each	2	4	0
1 „	Cast-iron cover	22	0	0	„	22	0	0
1 „	Fixing 3-inch air valve ...	1	8	0	„	1	8	0
						77	6	9
	Sundries at 5 °/₀, say ...	...	...	...		3	9	3
	Total Rs...	...	...	...		81	0	0
	Constructing a 4-inch Air Valve Chamber—(*see* **Drawing No. 54.**)							
378 c. ft.	Earthwork, excavation net outside pipe trench, including timbering, pumping, etc.	6	0	0	100 c. ft.	22	11	3
37 „	Concrete in combination mortar ...	35	0	0	„	12	15	2
106 „	Brickwork in combination mortar ...	32	0	0	„	33	14	9
17 „	Archwork in combination mortar ...	35	0	0	„	5	15	2
96 sq. ft.	Plastering with cement ½″ thick ...	8	0	0	100 sq. ft.	7	10	11
6·75 c. ft.	Granite stones	2	8	0	1 c. ft.	16	14	0
6 No.	Step iron	0	12	0	each	4	8	0
1 „	Cast-iron covers	22	0	0	„	22	0	0
1 „	Fixing 4-inch air valve	1	8	0	„	1	8	0
						128	1	3
	Sundries at 5 °/₀, say ...	...	...	...		5	14	9
	Total Rs...	...	...	...		134	0	0

Air Valve Chambers—(*contd.*)

Quantity.	Description of Works.	Rate.			Per	Amount.		
		Rs.	A.	P.		Rs.	A.	P.
	Constructing a 6-inch Air Valve Chamber—(*see* **Drawing No. 55.**)							
562 c. ft.	Earthwork, excavation net outside pipe trench, including timbering, pumping, etc.	6	0	0	100 c. ft.	33	11	6
62 „	Concrete in combination mortar ...	35	0	0	„	21	11	2
151 „	Brickwork in combination mortar.	32	0	0	„	48	5	1
20 „	Archwork in combination mortar ...	35	0	0	„	7	0	0
143 sq. ft.	Plastering with cement ½" thick ...	8	0	0	100 sq. ft.	11	7	0
9 c. ft.	Granite stones	2	8	0	1 c. ft.	22	8	0
8 No.	Step iron	0	12	0	each	6	0	0
1 „	Cast-iron cover	22	0	0	„	22	0	0
1 „	Fixing 6" air valve	1	8	0	„	1	8	0
						174	2	9
	Sundries at 5 %, say ...	...	...	...		8	13	3
	Total Rs...	...	...	...		183	0	0

Summary of Costs of Air Valve Chambers from detailed Estimates. (Pages 289 and 290.)

Quantity.	Description of Works.	Rate.			Amount.		
		Rs.	A.	P.	Rs.	A.	P.
2 No.	6-inch air valve chamber on 42-inch main..	183	0	0	366	0	0
1 „	6-inch air valve chamber on 36-inch main...	183	0	0	183	0	0
3 „	4-inch air valve chamber on 27-inch main..	134	0	0	402	0	0
1 „	4-inch air valve chamber on 24-inch main...	134	0	0	134	0	0
1 „	3-inch air valve chamber on 14-inch main...	81	0	0	81	0	0
1 „	3-inch air valve chamber on 12-inch main...	81	0	0	81	0	0
					1,247	0	0
	Contingencies and petty supervision, etc., at 10 %, say	...	...	...	153	0	0
	Total carried to summary page Rs.	...	...	...	1,400	0	0

Note.—Air Valves and Special Castings are included in "Pipes and Special Castings." Pages 244 to 252.

VENTURI METER CHAMBERS AND RECORDER HOUSES.

Quantity.		Description of Works.	Rate.			Per	Amount.		
			Rs.	A.	P.		Rs.	A.	P.
		Venturi Meter Chamber and Recorder House on a 42-inch Main—(*see* Drawing No. 61.)							
1,250	c. ft.	Earthwork, excavation net outside pipe trench, including timbering, pumping, etc.	6	0	0	100 c. ft.	75	0	0
156	„	Concrete in combination mortar ...	35	0	0	„	54	9	7
671	„	Brickwork in combination mortar ...	32	0	0	„	214	11	6
53	„	Archwork in combination mortar ...	35	0	0	„	18	8	9
984	sq. ft.	Plastering with cement ½″ thick ...	8	0	0	100 sq. ft.	78	11	6
168	„	Roofing with Mangalore tiles, including reepers, etc., complete ...	35	0	0	„	58	12	10
17·39	c. ft.	Woodwork wrought and put up ...	4	0	0	c. ft.	69	9	0
1	No.	Doors with bolts, hinges, etc., complete	26	0	0	each	26	0	0
2	„	Windows with iron bars, bolts, etc., complete	15	0	0	„	30	0	0
1	„	Finials, large, made of strong teak-wood	5	0	0	„	5	0	0
4	„	Finials, small, made of strong teak-wood	3	0	0	„	12	0	0
100	l. ft.	1″ galvanized connection pipe from meter to recorder house, including fitting, etc.	0	7	0	l. ft.	43	12	0
1	No.	Fixing meter, recorder and hatch box, jointing and connecting pipes, etc., complete	170	0	0	each	170	0	0
							856	11	2
		Sundries at 5 %, say ...	...	...	...		43	4	10
		Total Rs...	...	...	...		900	0	0

Venturi Meter Chambers and Recorder Houses—(*contd.*)

Quantity.	Description of Works.	Rate.			Per	Amount.		
		Rs.	A.	P.		Rs.	A.	P.
	Venturi Meter Chamber and Recorder House on a 36-inch Main—(*see* Drawing No. 61.)							
1,125 c. ft.	Earthwork, excavation net outside pipe trench, including timbering, pumping, etc.	6	0	0	100 c. ft.	67	8	0
150 „	Concrete in combination mortar ...	35	0	0	„	52	8	0
647 „	Brickwork in combination mortar ...	32	0	0	„	207	7	0
40 „	Archwork in combination mortar ...	35	0	0	„	14	0	0
968 sq. ft.	Plastering with cement ½" thick ...	8	0	0	100 sq. ft.	77	7	0
168 „	Roofing with Mangalore tiles, including reepers, etc., complete ...	35	0	0	„	58	12	10
17·39 c. ft.	Woodwork wrought and put up ...	4	0	0	c. ft.	69	9	0
1 No.	Doors with bolts, hinges, etc., complete	26	0	0	each	26	0	0
2 „	Windows with iron bars, bolts, etc., complete	15	0	0	„	30	0	0
1 „	Finials, large, made of strong teak...	5	0	0	„	5	0	0
4 „	Finials, small, made of strong teak...	3	0	0	„	12	0	0
100 l. ft.	1" galvanized connection pipe from meter to recorder house, including fitting, etc.	0	7	0	l. ft.	43	12	0
1 No.	Fixing meter recorder, hatch box, jointing and connecting pipings, etc., complete	150	0	0	each	150	0	0
						813	15	10
	Sundries at 5 °/ₒ, say ...	...	...	...		46	0	2
	Total Rs...	...	...	...		860	0	0

Venturi Meter Chambers and Recorder Houses—(*contd.*)

Quantity.	Description of Works.	Rate. Rs.	A.	P.	Per	Amount. Rs.	A.	P.
	Venturi Meter Chambers and Recorder House on a 30 or 27-inch Main—(*see* **Drawing No. 61.**)							
863 c. ft.	Earthwork, excavation net outside pipe trench, including timbering, pumping, etc.	6	0	0	100 c. ft.	51	12	6
113 "	Concrete in combination mortar ...	35	0	0	"	39	8	9
561 "	Brickwork in combination mortar...	32	0	0	"	179	8	4
22 "	Archwork in combination mortar...	35	0	0	"	7	11	2
934 sq. ft.	Plastering with cement ½" thick ...	8	0	0	100 sq. ft.	74	11	6
168 "	Roofing with Mangalore tiles, including reepers, etc., complete ...	35	0	0	"	58	12	9
17·39 c. ft.	Woodwork wrought and put up ...	4	0	0	c. ft.	69	9	0
1 No.	Door complete with bolts, hinges, etc.	26	0	0	each	26	0	0
2 "	Windows complete with iron bars, etc.	15	0	0	"	30	0	0
1 "	Finials, large, made of strong teakwood	5	0	0	"	5	0	0
4 "	Finials, small, made of strong teakwood	3	0	0	"	12	0	0
100 l. ft.	1" galvanized connection pipe from meter to recorder house, including fitting, etc.	0	7	0	l. ft.	43	12	0
1 No.	Fixing meter, recorder and hatch box, jointing and connecting pipes, etc., complete	120	0	0	each	120	0	0
						718	6	0
	Sundries at 5 °/₀, say...	...	...	...		31	10	0
	Total Rs...	...	...	...		750	0	0

Venturi Meter Chambers and Recorder Houses—(*concld.*)

Quantity.	Description of Works.	Rate.			Per	Amount.		
		Rs.	A.	P.		Rs.	A.	P.
	Venturi Meter Chamber and Recorder House on a 22 or 18-inch Main—(*see* **Drawing No. 61.**)							
825 c. ft.	Earthwork, excavation net outside pipe trench, including timbering, pumping, etc.	6	0	0	100 c. ft.	49	8	0
113 „	Concrete in special mortar ...	35	0	0	„	39	8	9
524 „	Brickwork in special mortar ...	32	0	0	„	167	10	10
16 „	Archwork in special mortar ...	35	0	0	„	5	9	7
936 sq. ft.	Plastering with cement ½" thick ...	8	0	0	100 sq. ft.	74	14	0
168 „	Roofing with Mangalore tiles, including reepers, etc., complete ...	35	0	0	„	58	12	9
17·39 c. ft.	Woodwork wrought and put up ...	4	0	0	c. ft.	69	9	0
1 No.	Doors with bolts, hinges, etc., complete	26	0	0	each	26	0	0
2 „	Windows with iron bars, bolts, etc., complete	15	0	0	„	30	0	0
1 „	Finials, large, made of strong teak...	5	0	0	„	5	0	0
4 „	Finials, small, made of strong teak...	3	0	0	„	12	0	0
100 l. ft.	1" galvanized connection pipe from meter to recorder house, including fitting, etc.	0	7	0	l. ft.	43	12	0
1 No.	Fixing meter, recorder, hatch box, jointing and connecting tubings, etc., complete	120	0	0	each	120	0	0
						702	4	11
	Sundries at 5 °/₀, say ...	...	...	...		37	11	1
	Total Rs...	...	...	...		740	0	0

VENTURI METER CHAMBERS.

Summary of Cost from detailed Estimates. (Pages 291 to 294.)

Quantity.	Description of Works.	Rate.			Amount.		
		Rs.	A.	P.	Rs.	A.	P.
1 No.	42-inch Venturi Meter Chamber on Main No. 1	900	0	0	900	0	0
1 "	36-inch Venturi Meter Chamber on Main No. 4	860	0	0	860	0	0
1 "	30-inch Venturi Meter Chamber on Main No. 7	750	0	0	750	0	0
1 "	27-inch Venturi Meter Chamber on Main No. 3	750	0	0	750	0	0
1 "	22-inch Venturi Meter Chamber on Main No. 5	740	0	0	740	0	0
1 "	18-inch Venturi Meter Chamber on Main No. 2	740	0	0	740	0	0
1 "	14-inch Venturi Meter Chamber on Main No. 6	740	0	0	740	0	0
					5,480	0	0
	Contingencies and petty supervision, etc., at 10 %, say	...	...	...	520	0	0
	Total carried to summary page Rs.	...	...	...	6,000	0	0

Note.—Venturi Meters, Hatch-boxes, Scour-pipe Connections are included in "Pipes and Special Castings."

SLUICE VALVE HYDRANT WITH STAND-POST.

(Drawing No. 58.)

Quantity.	Description of Works.	Rate.			Per	Amount.		
	(*See* **Drawing No. 58.**)	Rs.	A.	P.		Rs.	A.	P.
1 No.	$2\frac{1}{2}''$ sluice valve chamber, fixing valve and surface box—(*see* page 255)	16	0	0	each	16	0	0
14 c. ft.	Earthwork, excavation net outside pipe trench, including timbering, pumping, etc.	6	0	0	100 c. ft.	0	13	5
6 „	Concrete in special mortar ...	35	0	0	„	2	1	7
20 l. ft.	C. I. pipes, $2\frac{1}{2}''$ diameter ...	0	12	3	l. ft.	15	5	0
1 No.	Cutting main and fixing saddle or special branch for the main ...	35	0	0	each	35	0	0
1 „	Stand-post with bottom elbow, two gun-metal outlets and C. I. caps.	35	0	0	„	35	0	0
20 ft.	Laying $2\frac{1}{2}''$ C. I. pipes ...	0	1	0	ft.	1	4	0
4 No.	Lead joints	0	10	0	each	2	8	0
						108	0	0
	Sundries at 5 %, say ...	...	...	...		7	0	0
	Total for one Hydrant, Rs...	...	...	...		115	0	0

WASH-OUT INTO SIDE DRAIN.

(Drawing No. 60.)

Quantity.	Description of Works.	Rate.			Per	Amount.		
	(*See* **Drawing No. 60.**)	Rs.	A.	P.		Rs.	A.	P.
1 No.	Constructing a 4″ sluice valve chamber, fixing valve and surface box.	19	8	0	each	19	8	0
202 c. ft.	Earthwork, excavation net outside pipe trench, including timbering, pumping, etc.	6	0	0	100 c. ft.	12	1	11
27 „	Concrete in special mortar ...	35	0	0	„	9	7	2
22 sq. ft.	Plastering with cement ½″ thick ...	8	0	0	100 s. ft.	1	12	2
6 „	Cuddapah slab 3″ thick ...	20	0	0	„	1	3	2
1 No.	Cutting main and fixing saddle or fixing a new branch	35	0	0	each	35	0	0
15 ft.	Laying 4″ C. I. pipes	0	1	3	per ft.	1	2	9
4 No.	Lead joints	1	0	0	each	4	0	0
1 „	Name-plate	2	8	0	„	2	8	0
						86	11	2
	Sundries at 5 °/₀, say ...	...	...	...		4	4	10
	Total for one Wash-out, Rs...	...	...	...		91	0	0

SPECIAL LENGTHS ON NEW MAINS, Nos. 1 & 7.

Description of Works.	Amount.		
	Rs.	A.	P.
Main No. 1, *crossing Ottari Nullah*, supported on masonry piers to join Purasawakam High Road	1,000	0	0
Main No. 1, *crossing M. S. M. Railway*, in Elephant Gate Road, to run underground in concrete casings	600	0	0
Main No. 1, *crossing Buckingham Canal*, in Elephant Gate Road, carried on hangings on North Side Bridge	1,000	0	0
Main No. 1, *crossing M. S. M. Railway*, in Monegar Choultry Road, to run underground in concrete casings	600	0	0
Main No. 7, *crossing Ottari Nullah*, supported on masonry piers to run along the existing main	1,000	0	0
Main No. 7, *crossing the Brickfield Cuttings*, supported on masonry piers east of Government Brick Kiln	4,000	0	0
Main No. 7, *crossing S. I. Railway*, in embankment, under rail-road east of Chetput Station	600	0	0
Main No. 7, *crossing River Cooum*, in Nungambakam High Road, carried on hangings	1,000	0	0
Main No. 7, *crossing Buckingham Canal*, in Brodie's Road, carried on hangings...	700	0	0
Total carried to summary page Rs.	10,500	0	0

MISCELLANEOUS WORKS.

Summary of Cost from detailed Estimates. (Pages 296 to 298.)

Quantity.	Description of Works.	Rate.			Amount.		
		Rs.	A.	P.	Rs.	A.	P.
600 No.	Constructing 2½-inch sluice valve hydrants with-stand posts	115	0	0	69,000	0	0
300 „	Constructing wash-outs into side drains ...	91	0	0	27,300	0	0
	Extra cost for carrying mains on special supports for the proposed new mains Nos. 1 and 7	...	...	...	10,500	0	0
					1,06,800	0	0
	Contingencies and petty supervision, etc., at 10 %, say	...	...	...	10,700	0	0
	Total Rs...	...	...	...	1,17,500	0	0

GENERAL ABSTRACT OF COST OF WATER DISTRIBUTION SCHEME FOR MADRAS CITY.

Description of Works.	From Page	Amount.
		Rs.
Pumping Station, Design No. 1	220	1,63,350
Square Chimney for Pumping Station, Design No. 1	222	19,500
Pumping Machinery	Contract figure.	3,90,000
Elevated Tank—Earthwork and Masonry	230	1,28,800
Do. Steelwork in Foundations, Stanchions and Tank ...	231	1,91,500
Connection of the 48-inch Pumping Main with existing and proposed distribution Mains near the Shaft at Kilpauk	234	20,700
Cast-iron Pipes and Specials, including Pipes, Excavation, Laying and Jointing	270	30,30,000
Street Fountains	279	88,550
Sluice Valve Chambers	286	32,300
Waste Water Detecting Meter Chambers	288	19,360
Air Valve Chambers	290	1,400
Venturi Meter Chambers and Recorder Houses	295	6,000
Miscellaneous works (Sluice Valve Hydrants with Stand-Posts, constructing wash-outs into side drains, and extra cost for carrying Mains on special supports for the proposed new Mains Nos. 1 and 7)	299	1,17,500
Total Rs...	...	42,08,960